JPRS-TTP-88-001
17 FEBRUARY 1986

FOREIGN
BROADCAST
INFORMATION
SERVICE

JPRS Report

Telecommunications

20

JPRS-TTP-88-001

17 FEBRUARY 1988

TELECOMMUNICATIONS

CONTENTS

AFRICA (SUB-SAHARA)

EQUATORIAL GUINEA

Earth Station Opened in Bata
(Paris AFP, 15 Oct 87) 1

CHINA

Multichannels Accelerating Microwave Construction
(Yan Shi; Shanghai XIANDAI TONGXIN, No 1, 8 Jan 87) 2

Wired/Wireless Transfer Control Boards Designed
(Geng Qinxiang; Shanghai XIANDAI TONGXIN, No 1, 8 Jan 87) 8

EAST ASIA

HONG KONG

Cable and Wireless To Reorganize Subsidiaries
(Howard Winn; Hong Kong SOUTH CHINA MORNING POST,
22 Sep 87) 13

Videoconferencing Trial a First for Hong Kong
(Hong Kong SOUTH CHINA MORNING POST, 22 Sep 87) 15

Possible Consequences of Satellite Television
(Vicky Wong; Hong Kong SOUTH CHINA SUNDAY MORNING POST,
6 Sep 87) 16

Information on Communications Policy Needed
(Editorial; Hong Kong HONGKONG STANDARD, 11 Sep 87) 20

Telephone Network Unsuitable for Cable Television
(Hong Kong SOUTH CHINA SUNDAY MORNING POST, 6 Sep 87) 22

Panel To Examine Television Licensing Procedure
(Michael Chugani; Hong Kong HONGKONG STANDARD, 11 Sep 87) 23

Videophone To Be Available in 1988
(Fiona MacMahon; Hong Kong HONGKONG STANDARD, 16 Sep 87) 24

Officials Concerned Over Boost in Macao TV Signal
(Vicky Wong; Hong Kong SOUTH CHINA SUNDAY MORNING POST, 27 Sep 87) 25

LATIN AMERICA

INTER-AMERICAN

New Caribbean Telecommunications Body Established
(Georgetown GUYANA CHRONICLE, 18 Sep 87) 26

BARBADOS

Second TV Station Planned; CBC Pay-TV Scrapped
(Bridgetown SUNDAY SUN, 13 Sep 87) 27

BELIZE

Contract Signed for Telecom Equipment Purchase
(Port-of-Spain TRINIDAD GUARDIAN, 29 Sep 87) 28

NEAR EAST & SOUTH ASIA

INDIA

Chinese Transmitters Interfere With Broadcasts
(Vineet Dikshit; Delhi PATRIOT, 14 Oct 87) 29

Lawsuit Challenges Center Control of Broadcast Media
(Bombay THE TIMES OF INDIA, 10 Sep 87) 30

Problems of Telecommunications Department Reported
(Bombay THE TIMES OF INDIA, 6, 15 Sep 87) 31

Delays in Decisions 31
Reorganization Welcome, by P. Jayant 32

Electronics Panel Reconstituted, Mission Expanded
(Calcutta THE TELEGRAPH, 16 Sep 87) 34

Writer Outlines Growth of Bharat Electronics
(S. K. Sud; New Delhi PATRIOT, 7 Sep 87) 35

Briefs

Insat-IC Launch Date 37
Bureaufax Service 37
Local Area Network 37
Foreign Telecom Links 38

PAKISTAN

First Satellite Planned
(Islamabad THE MUSLIM, 28 Sep 87) 39

Efforts Urged for Progress in Space Technology
(Karachi DAWN, 1 Oct 87) 40

SOVIET UNION

Uzbek Paper Attacks Anticommunist Radio Propaganda
(K. Alimov; Tashkent PRAVDA VOSTOKA, 15, 17 Feb 87) 43

Methods of Psychological Warfare 43
"Amerika," Disinformation Campaign 45

WEST EUROPE

EUROPEAN AFFAIRS

Alcatel, AEG, Nokia Merging Mobile Telephone Activities
(Jean-Pierre Jolivet; Paris L'USINE NOUVELLE, 29 Oct 87) 49

Sweden's Ericsson, Finland's Nokia Internationalizing
(Helsinki HELSINGIN SANOMAT, 13 Oct 87) 50

Turkey, Finnish Firm Sign Agreement for Mobile Phone System
(Helsinki HELSINGIN SANOMAT, 10 Oct 87) 56

Mobile Phone System for Madeira Ordered From Finland
(Helsinki HELSINGIN SANOMAT, 22 Oct 87) 57

Goals of Eureka's Cosine Project Explained
(Peter A. J. Tindemans; Luxembourg IES NEWS, Aug 87) 58

FEDERAL REPUBLIC OF GERMANY

FRG Research Group Proposes Information Network
(Bonn TECHNOLOGIE NACHRICHTEN-MANAGEMENT INFORMATIONEN,
No 462, 28 Aug 87) 60

FINLAND

Nokia Chairman on International Competition, NMT Network
(Helsinki HELSINGIN SANOMAT, 22 Oct 87) 62

FRANCE

Impact of Telecommunications Reform
(Paris LES ECHOS, 14, 20 Oct 87) 63

Tax Relief for Business, by Valerie Lecasble 63
Increased Competition, Marcel Roulet Interview 65

ITALY

Italian Role in European Telecommunications Examined
(Milan BUSINESS, No 9, Sep 87) 69

Telettra CEO Interview, Raffaele Palieri Interview 69
ISDN, Fiber Optics R&D, by Clara Covini 75

Advanced System of Supervision, Control of Telecommunication Networks (ATS)
(G. Strada, A. Porzio; Milan SISTEMI DI TELECOMUNICAZIONI,
No 7-8, Jul-Aug 87) 79

Experimental Integrated Multiservice LAN Presented
(G. Audisio, et al.; Turin CSELT TECHNICAL REPORTS, 1987) 94

SIP Describes Available Data Transmission Services
(Domenico Vianello; Rome PRONTO?, Sep-Nov 87) 103

SWEDEN

Ericsson, Government Agency To Market Mobitex Mobile Radio
(Lars Ramklint; Stockholm DAGENS NYHETER, 23 Oct 87) 112

TURKEY

Briefs

Telephone Network 114

/9987

EARTH STATION OPENED IN BATA

55000001 Paris AFP in French 2214 GMT 15 Oct 87

[Excerpt]

Libreville, 15 Oct (AFP)—Equatorial Guinean President Teodoro Obiang Nguema Mbasogo, on 14 October inaugurated a telecommunications earth station linking Equatorial Guinea by satellite to the international network, it was learned from reliable sources in Libreville. The station is in Bata, the second largest city in the country, on Equatorial Guinea's mainland. It will make telephone and telex communications possible with Paris, from where they will be relayed to Douala (Cameroon), thus ending the isolation of the country, which until now has had no links with other countries. However, according to the experts, automatic link with some neighboring countries such as Gabon will demand the construction of a telephone exchange, which will become possible only in late 1988.

This project is essentially French. It has been financed by a loan of the Central Fund for Economic Cooperation totaling 900 million CFA francs (Fr18 million), supplemented by a contribution from the Aid and Cooperation Fund. The total investment amounts to 1,260 million CFA francs (Fr25.2 million). The implementation and the management of the project have been assigned to a French-Guinean joint-stock company, the Gete, the capital of which is shared by the Guinean State (Fr30 million) and the France-Cable company (Fr20 million).

/9274

MULTICHANNELS ACCELERATING MICROWAVE CONSTRUCTION

54004155 Shanghai XIANDAI TONGXIN [COMMUNICATIONS TODAY] in Chinese No 1, 8 Jan 87 pp 1-2

[Article by Yan Shi [1484 4258]: "Multichannels Accelerate Microwave Construction"]

[Text] The microwave communications circuits constructed by China's Ministry of Posts and Telecommunications for its own use and for other relevant departments in society now amounts to more than 50,000 kilometers. Today microwave towers are distributed both south and north of the Changjiang, microwave signals speed to all localities in our motherland and have taken on almost completely the task of transmitting radio, television and newspaper facsimiles and part have taken on the task of transmitting long distance telephone calls and telegrams displaying daily their advanced nature and outstanding performance.

The world's first microwave communications circuit for civilian use was built in the United States in 1950. When microwaves are used for long distance communications, just like a relay race, generally relay stations are set up every 50 kilometers to pass on the microwave signal from station to station. One microwave relay circuit can have 6 to 8 channels, and one channel can handle 960 or 1,800 telephone lines, and ones now used internationally can handle 2,700 and at most can relay 6,000 telephone lines.

China's Ministry of Posts and Telecommunications' microwave communications began to take shape gradually at the end of the fifties. In 1956 when the Central Committee heard the report of the Ministry of Posts and Telecommunications, Chairman Mao Zedong clearly indicated that microwave communications should be developed. At the time, scientific research personnel of posts and telecommunications departments developed 60-circuit microwave telecommunications equipment. Subsequently, they developed 300, 600, 960, and 1,800-circuit microwave communications systems in different frequency bands. In January 1969, a rare freeze occurred in the Changjiang and Huanghe valleys so that a great many telephone poles were toppled in East China and in the South Central areas seriously interrupting communications. On two successive occasions Premier Zhou Enlai called in officials of the Ministry of Posts and Telecommunications and relevant departments to receive reports and criticized communications departments as "traditionally conservative and seriously backward" and issued an important policy for accelerating underground cable and microwave communications trunk line construction. In 1976 China built over 10,000 meters of microwave communications trunk line linking the 26 provinces, autonomous regions, and municipalities of Beijing, Tianjin, Hebei, Shanxi, Liaoning, Jilin, Heilongjiang, Shaanxi, Gansu, Ningxia, Qinghai, Shandong, Jiangsu, Zhejiang, Shanghai, Anhui, Jiangxi, Fujian, Henan, Hubei, Hunan, Guangdong, Guangxi, Sichuan, Guizhou, and Yunnan, and began to transmit in succession telegrams, telephone, facsimile, radio broadcasting and television programs and gradually formed a national microwave communications network linking all parts of the country.

Since the Third Plenary Session of the 11th Party Central Committee, to adapt to the communications needs of the four modernizations and the masses of the people, posts and telecommunications departments have conscientiously implemented the policy of "readjusting, restructuring, consolidating and improving" and taken in hand renovating microwave communications trunk lines and actively begun the readjusting of the country's microwave circuit organization to form a network between the major areas and the provinces and between province and province, improved the quality of microwave communication and strengthened network circuit communication capability. Beginning in October 1980, between major points on the microwave communication trunk line, automatic dialing was implemented in stages and groups on domestic microwave long-distance telephone so that the crowded conditions on the communications circuits from Beijing to the Northwest, Southwest and South Central areas were alleviated. In the summer of 1981, a particularly big flood occurred in the Southwest and Northwest areas and suspended lines and cable communication circuits were broken, but microwave communications continued unimpeded and played an important role in combating the flood and in rescue. On the foundation of the great achievements made in microwave renovation, in recent years posts and telecommunications departments have updated equipment and increased capacity on the microwave circuits already built from Beijing to Xi'an, Beijing to Qinhuangdao, and Shanghai to Hankou. After three channels were added to the Shanghai to Hankou microwave circuit, it resolved in a preliminary way the problem of crowding in the communications of the Changjiang Delta and the South Central area. Currently, updating equipment and increasing rated capacity projects for the Beijing to Changchun, Shanghai to Zhengzhou, and Taiyuan to Xi'an microwave circuits are proceeding apace. Up to the present, nationwide over 60 cities above xian level use microwave circuits for opening long distance telephone automatic and semi-automatic switching, including implementing long distance automatic dialing between 26 cities above provincial city level. Using microwave circuits provided by the posts and telecommunications departments, Beijing can send newspaper facsimiles to 15 cities, including Chengdu, Guangzhou, Lanzhou and Nanjing. Nearly 10 newspapers including RENMIN RIBAO, GUANGMING RIBAO, GONGREN RIBAO, JIEFANG RIBAO, and CANKAO XIAOXI are now locally printed with the help of facsimile, and are available 2 days earlier than the airmail edition, so that readers in these areas can see central newspapers the same day, accelerating the dissemination of party directions and policies and promoting socialist spiritual education.

With the implementation of the policies of invigorating the economy internally and opening up externally, the need of various areas of society for information and information transfer becomes more urgent daily. To meet the needs of the new situation, posts and telecommunications departments in the localities are implementing a direction of state, local area, collective and individual together to mobilize and develop the initiative of various areas and widely raise construction funds and strive to develop intra-province microwave communications. Many provincial, regional and municipal posts and telecommunications departments such as Guangdong, Fujian, Shanxi, Zhejiang, Anhui, Hubei, Heilongjiang, Jilin, Shandong, Shanghai, Jiangsu, Hunan, Henan, and Yunnan have done a great deal of work in building intra-province microwave communications and have made encouraging achievements. Up to the present, posts and telecommunications departments nationwide have raised funds and built over 4,000 kilometers of secondary microwave communications trunk lines. Of the secondary microwave trunk lines, over 2,000 kilometers were built in 1984, and over 1,500 kilometers in 1985. To meet the needs of opening up externally and resolve the problem of crowded communications from Guangzhou to Hong Kong as quickly as possible, the Guangdong Province Bureau of Posts and Telecommunications jointly with Hong Kong built the Guangzhou-Hong Kong 2700 circuit microwave project and the Guangzhou-Hong Kong long distance telephone semi-automatic dialing equipment and Guangzhou-Hong Kong direct dial project so that now long distance telephone calls made through the microwave circuit are automatically switched, Hong Kong users can direct dial any automatic telephone user in Guangzhou and the major hotels and telephone operators in Guangzhou also can direct dial Hong Kong users. They also actively used foreign funds to develop microwave communications. The 1800 circuit microwave communications system from Guangzhou to Zhanjiang used foreign funds, imported Japanese microwave equipment and used Chinese-manufactured carrier wave and power supply equipment. The overall length of this project is over 600 kilometers and it went into formal use in March 1986. Its construction and going into use not only was interconnected with microwave trunk lines in such places as Eastern Guangdong, Zhujiang, and Guangzhou-Hong Kong which had been constructed earlier but also with the Jing-Han-Guang-Zhong coaxial cable communications trunk line and network so that such places as Hainan Island and Zhanjiang could gradually make long distance automatic dial telephone calls to many cities inside and outside the province and the Hong Kong Macao area, and carry out new operations such as sending data and facsimile. With the vigorous support of the local government, they opened microwave circuits from Foshan to Guangzhou, Shenzhen, Zhuhai, Hong Kong and such places as Shunde and Zhongshan running throughout the Zhujiang Delta. The Fujian Bureau of Posts and Telecommunications jointly with the Provincial Radio and Television Office constructed the 960 circuit Fujian--Xiamen--Zhangzhou microwave communications project with an investment of 10.42 million yuan, with each side taking responsibility for half, initially with four channels, two of which are for television programs of the Provincial Radio and Television Office and the other two for communications channels and reserve channels. Construction on this project was completed in 1983, the color television programs transmitted are clear and communications quality is excellent. They also built, in cooperation with the Provincial Office of Water Conservancy and Electric Power, a 960 circuit Nanping--Yong'an and

Yong'an—Zhangzhou microwave project at an investment of 17.40 million yuan, 9.8 million yuan from the Provincial Office of Water Conservancy and Electric Power and 7.6 million yuan from the Posts and Telecommunications Bureau. After the project was completed it provided the provincial electric power departments with the special electricity dispatch communications circuits needed and posts and telecommunications departments could construct microwave communications network in central Fujian. This not only avoided unnecessary duplicate construction and waste but also could satisfy the various areas in society's need for communications. The Shanxi Province posts and telecommunications departments, on the basis of that province's mountainous terrain which is well suited to developing microwave communications, suiting measures to local conditions, decided to develop microwave communications vigirously. The 300 circuit Taiyuan to Changzhi microwave project which they built jointly with the Provincial Radio and Television Office is over 300 kilometers long, used three existing posts and telecommunications stations and two radio and television stations, requiring only a little over 5 months to begin transmitting television programs, and saving over 2 million yuan. After this microwave circuit went into operation in April 1984 the masses in the Changzhi area could see Central and provincial television programs and it provided 300 long distance telephone circuits for the posts and telecommunications departments. The Liaoning Provincial Posts and Telecommunications Bureau jointly with the Dalian Municipal People's Government built a 960 circuit microwave project from Shenyang to Dalian, a total distance of 387 kilometers at an investment of over 11 million yuan. The project went into operation in October 1984. On the basis of the low investment, fast results, and good benefits of microwave communications construction, the Henan Provincial Posts and Telecommunications Bureau jointly with the Jiaozhou Municipal People's Government constructed a 960 circuit microwave circuit from Zhengzhou to Jiaozhou, resolving the problem of long distance telephone automatic dialing and relaying television and data communications. The municipal government invested 8 million yuan, the posts and telecommunications departments invested 10.6 million yuan and the project was completed in December 1985. They also jointly with the Loyang Refinery and the Puyang Municipal People's Government and the Zhongyuan Oil Field constructed two 960 line microwave circuits from Xiuwu to the Loyang Refinery and from Zhengzhou to Puyang. In 1985 the Heilongjiang Provincial Posts and Telecommunications Bureau signed agreements with six cities, Mudanjiang, Jixi, Hegang, Qitaihe, Jiamusi, and Shuangyashan to pool resources and construct a microwave communications circuit from Harbin to Shuangyashan, a total distance of over 700 kilometers. The Anhui Provincial People's Government decided to help posts and telecommunications organize relevant units to pool resources and construct a microwave trunk line running south and north through Anhui. This microwave trunk line is centered at Hefei and divided into northern and southern sections. The northern line running from Hefei through Liuan, Huoqiu, and Yingshang to Fuyang, and the section toward the south goes through Yanchang and other localities to Tunxi. Along the route they constructed 16 microwave stations at a total investment of over 23 million yuan. After this trunk line is constructed and opened to service it will greatly change the appearance of communications and television transmission throughout Anhui.

In recent years, while accelerating construction of intraprovince microwave communications, posts and telecommunications departments have also been geared to the needs of society and have actively supported the expansion of microwave communications by such departments as radio, electric power, petroleum and coal and have provided them with complete sets of microwave communications equipment. Up to the present over 30,000 kilometers of microwave circuits have been constructed for various departments in society. Of this number radio departments have built over 22,000 kilometers, hydroelectric departments have built over 10,000 kilometers, petroleum departments have built over 2,000 kilometers, and coal departments have constructed over 1,000 kilometers. Over the past few years, the China Posts and Telecommunications Industry Company's microwave communications group has contracted for 136 microwave projects for customers, of which the large-scale communications networks for which they have contracted include microwave projects at the Daqing Oil Field, North China Oil Field, and Changqing Oil Field; the Shanghai to Wuzijiang electric power communications dispatch network and Inner Mongolia radio and television microwave projects; the Shanxi, Liaoning, Hubei Radio and Television Office microwave project; and the Zhejiang, Fujian, Jiangsu, Shanghai, Heilongjiang, Jilin, Guangdong, Guangxi, and Yunnan electric power network microwave communications project. For example, petroleum departments use microwave equipment provided by posts and telecommunications departments to improve the Daqing Oil Field communications network and in just 3 years' time saved over 3 million yuan. Again, the Shanghai to Wuzijiang microwave project constructed by posts and telecommunications departments for electric power departments has a total of 23 microwave stations, an investment of 12.7 million yuan and is an important trunk line in the Northeast power grid. After the contract was signed, the posts and telecommunications departments organized six plants and two materials supply depots in Beijing and Xi'an to participate and after 3 years of collective effort the project went into operation as scheduled. Last year on the eve of the National Day, the Zhongyuan Oil Field microwave communications project for which the posts and telecommunications departments had contracted was completed victoriously and formally went into operation resolving problems of communication linkages within the entire oil field better and faster and earning the enthusiastic praise of petroleum headquarters and the petroleum workers.

In the past few years, new advances have been made in posts and telecommunications department microwave communications scientific research. For example, a 6 GHz 1800 circuit microwave communications system has eight channels which can simultaneously carry two color television feeds with four audio circuits and 7,200 telephone circuits. Performance is stable and reliable and it is used to improve existing old-style 600 circuit microwave equipment, communication capability can grow ten-fold and the investment per circuit kilometer is only one-third that of the investment in 960 circuit microwave. A 6 GHz 1800 circuit microwave system prototype passed ministry level appraisal at the Xian Microwave Equipment Plant in June 1986 and has gone into formal production. The Ministry of Posts and Telecommunications has decided to use the results of this research for technological improvement of existing microwave trunk lines and at the same time will further accelerate microwave communications construction. To adapt to the communications needs of rural economic development, posts and telecommunications research units are also developing an inexpensive 8 GHz digital telephone suited for use between xians and rural areas and between local areas and xians. This equipment is in trial use in Zhejiang between Shenjiamen and Liuhenghaidao and in tests of a level 12 typhoon all other communications methods were cut off but this microwave equipment alone was still in normal use and was evaluated highly by local governments. At the same time, microwave equipment production has grown from purely traditional analog technology in the direction of digitization. Not long ago, the China Posts and Telecommunications Industry Company microwave communications group also promoted a 34 Mb/sec digital microwave communications system which includes 34 Mb/sec microwave receiving and sending system equipment, medium frequency modem equipment, 1,2,3 and 0 group PCM multiplexing equipment and computer, teletype, facsimile machine, data transmission equipment and its matching data time-division multiplexing equipment. This digital microwave communications system has the capability of contracting domestic communications network projects and participating in international bids.

In a speech at the National Posts and Telecommunications Working Conference in November 1984, Vice Premier Li Peng [2621 7720] said that microwave communications will develop for a rather long time. In order to adapt to the need to quadruple the gross value of output of industry nationwide by the end of the century, the technology policy in the area of microwave communications is: large and medium capacity microwave systems will be used primarily for trunk lines, medium and small capacity microwave systems will be used primarily for branch lines, low power, solid state, unattended and automatic monitor managed microwave systems will be developed and adopted, digital microwave will be developed in line with local measures, and new higher frequency systems will be developed. On the basis of predictions in relevant areas, during the Seventh Five-Year Plan, whether posts and telecommunications departments or other relevant departments of society, there will be major developments in microwave communications construction and it is estimated that the overall length of newly constructed microwave circuits may reach over 80,000 kilometers which is equivalent to more than twice the distance around the earth.

8226/6091

WIRED/WIRELESS TRANSFER CONTROL BOARDS DESIGNED

55004155 Shanghai XIANDAI TONGXIN [COMMUNICATIONS TODAY] in Chinese No 1, 8 Jan 87 pp 9-10

[Article by Geng Qinxiang [5105 2953 4382]: "Wired/Wireless Transfer Console"]

[Text] In recent years, mobile wireless communications has been widely used in national defense, military affairs, public security, fire-fighting, physical education and mining enterprise units and has gradually entered people's daily lives. Wireless communications has gradually moved in the direction of a variety of models and thus central control switching has attracted a great deal of attention. The current Chinese-manufactured related equipment still cannot suit the specific situations of various localities. On the basis of China's current economic situation, units which are using it generally demand a product which is all round in performance, easy to use and low in cost. To suit the special features of public security communications, we have designed a small wired/wireless switching center console, called the ZJK model. This equipment is complete, flexible for dispatch, complete in terms of functions, very good in performance, easy to use and also low in cost, and especially most practical for even high frequency (VHF) and ultra high frequency (UHF) network units.

Design Scheme

This switching control equipment must have two wired interrupt circuits, six wireless circuits (two zhiji [0237 2623] channels and four switching call channels) and 15 functions.

I. Wired Part

The wired input terminal can be divided into input magnet, common battery and automatic switchboard. When a wired telephone receives a wireless telephone call, since the wireless is a four-wire open receiver, a difference circuit is added to this circuit (mixed coil), converting the two-wire circuit into a four-wire circuit, and carrying out the connection of the wired telephone and the wireless telephone. This circuit's resistance is 600 ohms, transmission attenuation is 3dB. If the opposite terminal's loss is infinitely large it prevents ringing (see Figure 1).

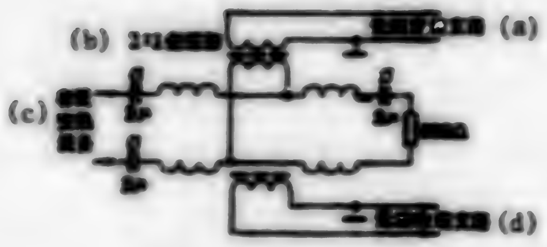

Figure 1

Key:

a. Wired switching equipment
b. 1:1 transformer
c. Wireless sending branch circuit
d. Wireless receiving branch circuit

II. Three Situations in Wireless Switching

1. Wireless switching wired: Can be directly connected with wired difference coefficient four-wire terminal and to take care of excessively low noise when receiving a wired telephone call, an amplifier is added to the four-wire transceiving circuit to increase the signal.

2. Wireless interrupt call: The wireless set itself autoconnects transceiving, to take care of circuit ringing, an unbalanced four-terminal network is connected in series between sending and transmitting (x type attenuator). The attenuation level is about 2 decibels, and the resistance of each arm is calculated as

$$R_1 = R_0 \frac{P - P^{-1}}{2}, \quad R_2 = \frac{R_0}{P-1} \cdot \frac{P+1}{L_k - 1},$$

and impedance is 600 ohms. (Figure 2)

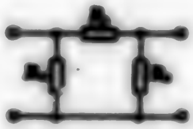

Figure 2

3. Wireless switching wireless call: This is the interconnection of two telephone sets transceiving at different frequencies, an unbalanced four-terminal network is connected in series between sending and receiving to match impedance and take care of ringing.

III. Call Selection Encoding

Utilizing the call select encoder (either imported or domestic) matched to the wireless telephone series connected into the guard channel, encoding calls can be carried out to subordinate stations.

IV. Recording Circuit

When recording a voice channel, since the wireless conversation is four-wire interconnection, it is necessary to record receiving and sending simultaneously, in design 10 microfarad capacitors were used and to separate receiving and sending a stereophonic recorder is used to record the four wireless zhiji switching channels separately and to separate the recorder ground and the telephone instrument a 2 microfarad capacitor is added to take care of the AC sound created when the recorder is using AC (see Figure 3 for the circuit).

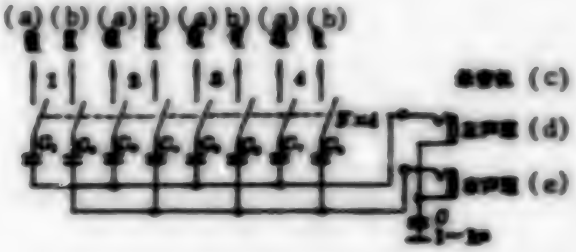

Figure 3

Key:

- a. Sending
- b. Receiving
- c. Recorder
- d. Left channel
- e. Right channel

V. Volume Control and Level Indicator Circuits

The zhiji has a visible and audible signal which conforms to the telephone operator's operating procedures. The audio frequency amplifier amplifies the signal received and through rectification changes it to pulse direct current, and through a two level direct couple emitting follower (which separates and increases the input resistance) it is sent to a switch circuit. When there is a signal the switch circuit makes the connection through a relay, at the connection point there is a sound and the light and bell both start. To make it easy for the on-duty operator to operate, at night the zhiji has a night bell circuit. LED's form a level step indicator so that the opposite party's transmission signal level can be easily observed and an amplifier shared with the volume control circuit, when the sound reaches a specified value, the last LED in the level indicator lights up and the bell rings. This can prevent errors.

The switching console is 120 cm long, 80 cm wide, 110 cm high in the back and 80 cm high in the front, it is sloped and the face panel and switching control part have 32 buttons (see Figure 4 for a block diagram).

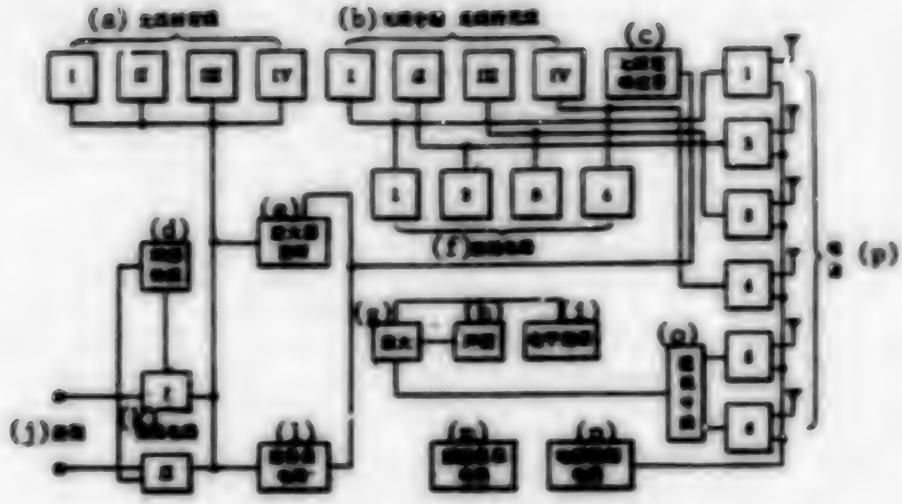

Figure 4

Key:

a. Wireless to wired
b. Wireless interrupt wireless to wireless
c. Wireless audio response
d. 20 Hz bell current
e. Amplifier audio
f. Attenuation circuit
g. Amplify
h. Volume control
i. Level indicator
j. External wires
k. Wired circuit
l. Telephone operator circuit
m. Frequency channel indicator circuit
n. Power supply control circuit
o. Zhiji waiting
p. Stations

Functions

1. Two wired telephones can be connected to common power, magnets and automatic switching equipment on the basis of their specific uses.

2. There are two guard channels, one for main use and two for reserve or simultaneous use.

3. There are four wireless switching voice channels which can be connected simultaneously to wired circuits at will for wired switched to wireless communication.

4. Four wireless circuits can be switched simultaneously for relaying communication between subordinate instruments.

5. Four wireless circuits can complete switching between 6 channels: i.e., 1 to 2, 1 to 3, 1 to 4, 2 to 3, 2 to 4, and 3 to 4.

6. Four wireless circuits can use one part of the recorder which uses four recording switches on the panel to carry out stereophonic recording separately.

7. A call select encoder can be connected to the zhiji waiting channel to ensure circuit quiet on this channel.

8. There is a digital code frequency channel display on the control panel.

9. There is a volume control circuit in the zhiji waiting channel, so that when a subordinate station calls, the lamp lights up and the bell rings so that there is a visible and audible signal and in the evening a night bell can be connected to the zhiji.

10. There is a LED level indicator circuit so that the transmission level of the other party can be observed easily.

11. There are a microphone stand and an incoming call amplifying circuit.

12. This equipment uses an integrated independent power supply for each wireless station and on the console which can be easily controlled from the console and there is an indicator signal.

13. For each wireless station there is an emission current indicator and voltage indicator. And there is a three-function digital clock.

14. When each of the wired and wireless circuits is talking they have a line busy indicator and a LED level step indicator when busy.

15. There is an automatic dialing system which can dial automatically when connected to the switchboard.

Technical Indicators

1. This device's wired rated circuit resistance (user loop resistance) >2kΩ

2. This device's characteristic impedance is 600Ω

3. Frequency conversion loss characteristics: the difference between 800Hz and any frequency in the 300-3400Hz range ≤0.3db

4. Random noise protection ≥62db

5. Crosstalk protection ≥65db

8226/6091

CABLE AND WIRELESS TO REORGANIZE SUBSIDIARIES

55500028 Hong Kong SOUTH CHINA MORNING POST in English 22 Sep 87 Supplement p 1

[Article by Howard Winn]

[Text] CABLE and Wireless plc is holding talks with the Government over the reorganisation of its two Hongkong subsidiaries, Hongkong Telephone and Cable and Wireless (Hongkong) into a single listed company.

The likely form of this reorganisation is a merger of shareholding interests between Telco and Cable and Wireless (Hongkong), according to Douglas Ferguson of Prudential Asia Capital, financial adviser to Telco.

A statement released by Telco yesterday said the discussions were at a preliminary stage. In the event of a restructuring, Cable and Wireless plc would remain the majority shareholder and "it is not envisaged that any cash offer would be made to Telco shareholders".

In other words, there will be no buyout of Telco minority shareholders by its parent a move which has been the subject of recurring rumours over the past few years.

Telco's shares were suspended yesterday.

"We suspended the shares because we were concerned at the uninformed comment and speculation that was circulating around the market that had contributed to a significant increase in the turnover of the shares," said Mike Gale, managing director of Telco.

The shares will resume trading tomorrow, but the new general manager for Cable and Wireless plc, Terry Miller, said it was unlikely that details of the reorganisation would be announced tomorrow.

"We have yet to reach a situation where we can put a firm proposal to government as we are still discussing various aspects of the possible reorganisation," Mr Miller said.

"We suspended the shares because we wanted to cool the speculation in the market. We had hoped to get a little further with our discussions before making an announcement so that we could say something more positive," he added.

He expected details to be announced within the next few weeks.

Mr Miller said that despite speculation to the contrary, Li Ka-shing was not involved in the negotiations with the Government over the proposed restructuring.

"These discussions started long before Mr Li bought his 4.9 per cent stake in Cable and Wireless plc," he said.

UK-based Cable and Wireless plc owns 80 per cent of Cable and Wireless (Hongkong), with the remaining 20 per cent held by the Hongkong Government.

Cable and Wireless plc owns 79.2 per cent of Hongkong Telephone.

Mr Miller said that when Cable and Wireless (Hongkong) was set up in 1981, it was always envisaged there would be some element of public ownership in the Hongkong unit.

Cable and Wireless plc bought its stake in Telco in 1984.

"There is absolutely no question that we will sell our majority stake in the Hongkong interests," Mr Miller said, though adding that it was possible the parent might reduce its controlling interest.

Talk of a restructuring involving Hongkong Telephone resurfaced about a fortnight ago. The rumours gained momentum after Mr Li's announcement that his group had bought a stake in Cable and Wireless, with variants emerging practically every day last week.

One version was that Cable and Wireless plc would take Telco private and then either sell the company to a third party, or reduce its stake, with the Government selling its holding to Mr Li.

Last night, Financial Secretary Piers Jacobs said at a press briefing before his mid-term economic review that the Government's 20 per cent holding in Cable and Wireless (Hongkong) and the possible restructuring were not related.

"As my predecessor (Sir John Bremridge) said, one must ask oneself whether a shareholding is a correct investment for the Exchange Fund. Some might think it is not.

"That is a question we have been addressing for many months dating right back to Sir John's time. We haven't made a decision as yet."

/13046

VIDEOCONFERENCING TRIAL A FIRST FOR HONG KONG

55500029 Hong Kong SOUTH CHINA MORNING POST in English 22 Sep 87 p 3

[Text] HONGKONG Bank last week embarked on a video conferencing trial that will run to the end of the month, the first in the territory, according to officials at Hongkong Telephone which is providing the service.

The test is being run between the bank's headquarters and its London head office. The bank said it is using the trial period to assess its video conferencing needs.

Video signals are being carried by optical fibre cables within the Hongkong Telephone network to Cable and Wireless (HK) for transmission via satellite to London.

A mobile system was installed in a conference room which houses the self-contained unit with two built-in cameras, two 27-inch colour monitors with split screen facility, and a nine-inch self-view monitor which displays outgoing video signals.

A remote control facility is also available.

A system of the same design is installed in London where Mercury Communications Limited is responsible for the communication link.

The video conferencing service which Hongkong Telephone plans to introduce early next year is one of several interactive services that the company hopes to offer on the telephone network.

Optical fibre cables now connect telephone exchanges to many large commercial buildings such as the Hongkong Bank headquarters and major hotels.

In another development, Telco said plans were being made to extend its Businesslink service, introduced last week for US, UK and Australian destinations.

Businesslink is an international free-phone service – along the lines of the toll-free zenith and 800 numbers used in North America – enabling local companies to promote their business overseas without the need to set up an expensive base outside Hongkong.

Telco said subscribers to Businesslink will be allocated an exclusive local number, for use in a particular country.

Through special technical arrangements, calls to the number will be routed automatically to Hongkong at no charge to the calling party overseas.

Subscribers in Hongkong pay an initial fee, the normal outgoing IDD rate for each incoming call received, plus a monthly access fee for every freephone number allocated.

Telco said that, with Businesslink, most companies in Hongkong could have a local presence overseas, allowing them to conduct promotional and sales activities.

The company did not indicate which companies – or why – would not be allowed to take advantage of the service.

It also said that – at no cost to the customers – Businesslink enables companies in Hongkong to provide business support in Cantonese.

Telco said it expected companies in the travel, finance and trading sectors to benefit especially from this new service.

Companies with staff working or travelling overseas can also use the service from their home, office or hotel as an effective communication tool to stay in touch, it said.

Officials cited the savings on hotel surcharges for international calls and the advantage of more effective control of company expenses, in one application example.

Plans are in hand to extend the service to more destinations.

Hongkong Telephone and Businesslink details are available on 008-4-800.

/13046

POSSIBLE CONSEQUENCES OF SATELLITE TELEVISION

55500031 Hong Kong SOUTH CHINA SUNDAY MORNING POST in English 6 Sep 87 p 3

[Article by Vicky Wong]

[Text] HONGKONG and Macau this week found themselves headed towards disagreement over television broadcasts – the first rumblings in the kind of dispute that could become commonplace within the next few years.

Trans-national data flow, the business of sending electronic signals into the territory of another sovereign state, is likely to be one of the world's great arguments before the 21st century begins.

Communications wizardry, all based on signals zooming to space and back, has had one significant side-effect – it has challenged the barriers of censorship.

For a while this week, it sounded to some that the Hongkong Government was talking about censorship of television from Macau. Censorship by jamming the signal.

Tdm, the Macau TV station, is well-advanced with a project to build a relay station to enable its signal to be picked up by most viewers in Hongkong.

Not just programs but more significantly perhaps, advertising – for cigarettes which are shortly to be banned from Hongkong screens.

The tobacco and television industries have been thrown into something approaching disarray by a Government decision some months ago to phase out cigarette commercials in Hongkong.

The big tobacco money now is looking to Macau, where there are no such restrictions.

Millions of dollars that were once sent to Broadcast Drive now seem destined to cross the water to Macau, with the cigarette commercials bouncing straight into our homes. TVB and ATV, meanwhile, would be barred from running the same commercials.

University of Hongkong political science lecturer and RTHK broadcaster Mr Stephen Davies, says the Hongkong/Macau imbroglio presents a case in miniature of the sort of cross-border problems we can look forward to when satellite television takes off in this region.

And Secretary for Administrative Services and Information, Mr Peter Tsao, says Hongkong's concerns have been relayed to the Macau authorities, but there is nothing the Government can do if they persist with their plans to broadcast to Hongkong.

"Jamming is out of the question," he said. "In terms of policy, we don't behave that way."

Landcrest's Mr Fraser Hicken, a communications engineer, noted that it would be impossible to jam Macau's broadcasts without producing reception problems for the two local stations since all three transmit on frequencies quite close to one another.

"When you're jamming, you're pushing a lot of energy into the air and this will have a spillover effect," he said.

Jamming satellite television transmissions are even more difficult since to be most effective, signals should be interfered on the "uplink", when they are being sent up to the satellite for re-transmission elsewhere, which would result in no one being able to get anything at all.

It might be possible to conduct localised jamming operations using very high powered frequencies, but again this would result in a lot of spillover effect which would interfere with the telecommunications network.

What this boils down to is that satellite television will break down censorship barriers as easily and as cheaply as short-wave radio once did.

And just as governments the world over have recognised the futility of trying to control short-wave radio broadcasts, satellite television will be equally impossible to regulate.

Falling barriers in political censorship may be a good thing in countries where access to information is curtailed, Mr Davies noted.

He warned, however, that the same unrestricted access to some of the "adult entertainment" programs currently acceptable in the West could pose real concerns to nations with different and stricter standards of public morals.

In the United States and Europe where satellite television is most popular, such arguments have been generally settled with the authorities having assumed an "open sky" policy with viewers free to tune in to whatever they can pick up from their dishes without interference from the government.

Mr Richard Hylen, from Turner Programs Far East, which is marketing the 24-hour news and current affairs Cable News Network channel to this part of the world, says American viewers now have more than 180 different satellite TV channels to choose from, most of which are transmitted unscrambled.

An estimated two million satellite dishes have already been installed in the US, a figure which he noted becomes even more significant when about half the households in America already subscribe to cable television.

"If the programs are what people want and the equipment to receive it is available in the country, people are going to watch it," said Mr Hylen.

"The fact is that governments cannot exert the same sort of controls over broadcasting that they could before satellite and some have recognised this and relaxed their regulations."

Landcrest's Mr Hickes, a communications engineer, adds that if you take the rare-mystery out of satellite TV, all you get is nothing more than short-wave radio – and something as difficult to control.

"A television signal is after all only a radio signal," he said.

It appears that governments are also mindful that, like short-wave radio, satellite TV could offer an extremely powerful propaganda weapon.

The United States has set up Worldnet, a Government-sponsored channel which at present broadcasts programs daily via satellite to Europe and Latin America and Britain's BBC also plans to set up its own service soon.

Mr Hickes, whose company makes and installs satellite dishes locally, says language barriers would not pose any great problems since it is already possible to broadcast a television visual signal along six different audio ones. In other words, the same program could be simultaneously transmitted to many different places in the native language.

To date, however, the problem of cross-frontier broadcasting has not assumed any significant proportions because few people in countries with strict censorship laws could afford the technology, given the relative expense of the equipment needed to receive satellite transmissions.

And in those countries where the individual installation of satellite reception equipment is banned, the size of the three- to six-metre diameter antennae or dishes generally needed to receive these programs makes illegal installation difficult to conceal from the authorities.

Mr Hicken, however, feels the next 15 years should see a radical reduction in both the cost and size of the equipment.

For instance, the technology already exists for planar arrays, or flat antennae as opposed to the parabolic dishes most commonly used now, and these, about the size of a telephone directory, would be difficult to detect once in place and painted over.

Nor need antennae be placed in fixed positions. Portable models have already been invented and technological advances will no doubt see compact satellite TV systems as small and as easily transportable as short-wave radios now are.

It would be virtually impossible in the future for governments to try and locate where satellite TV receivers are without going on a house-by-house search.

Mr Hicken said that during the early days of television, sets had circuits which emitted a radio frequency which could be easily traced. And this made it possible for the authorities to monitor who had television in order to ensure they paid the required fee for the service, as in Britain.

This would be unrealistic today though since modern sets are made to stricter standards which makes it far more difficult to detect the signals.

All these developments could greatly increase the popularity of satellite television in the less developed nations – and the threat they pose to governments concerned with regulating what their people can watch on television.

Even now, some of the satellites transmitting TV signals are so powerful that their "footprint", or the area covered, extends across nearly half the world with no respect to national frontiers and many even more powerful ones are due to be launched over the next few years.

Any sort of political censorship would be difficult to establish with satellite TV, says Mr Davies.

But satellite television could also bring with it a threat of "commercial imperialism" to Third World countries, he warned.

"The economics would be wholly against home-grown television," he said.

"It makes more sense for a large world conglomerate to beat out the same old rhubarb for world consumption."

If the global stations could woo audiences away from national television, advertisers may prefer to divert their funds instead to the major producers which could threaten the viability of the domestic industry.

In the Macau case for instance, different standards between the two territories allows TdM to accept tobacco advertising when this could not be shown in Hongkong, and this could lead to a surge of revenue pouring to the other side.

And if Macau could produce programs able to capture Hongkong audiences, this would encourage even more advertisers to switch.

"This could produce a vicious spiral which could have quite serious consequences for Hongkong," Mr Davies said.

The inability of governments to control either the program content of satellite television, or to find practicable methods of preventing their people from watching it once it gains in popularity, could lead nations to address the problem in a concerted fashion, he predicted.

"It would not surprise me to see in 10 years' time governments getting together and licensing control access to satellite time."

He noted that this might provide a practical way of controlling what is broadcast without necessarily infringing on political rights.

Even in the United States, for instance, where freedom of expression is enshrined in the First Amendment, the courts have recently made several decisions to curtail greatly racialist programs.

And even the International Covenant on Civil and Political Rights contains provisions to enable signatory states to impose censorship in certain areas, such as pornography, Mr Davies noted.

Political commentator Mr T.L. Tsim doubts that satellite TV can take off in this region in the near future.

The relatively high cost of the equipment and their illegal status in many countries would tend to severely limit the number of those tuning in to the service.

Moreover, the programs available mostly originate from foreign sources with different cultures and may not be readily acceptable to local people.

Even the propaganda aspects of satellite television may not be as effective as shortwave radio because of the language barrier.

For instance, although newscasts could be broadcast in different languages, Mr Tsim said that the visual incompatibility of watching a newscaster presenting the facts in a dubbed tongue may pose credibility problems among the audience.

Mr Hylen claims the real test of whether satellite TV will become popular in this part of the world will depend on how much the program offerings manage to capture the audience.

And based on what has happened in other countries, what people want first are films, then sports and current affairs programs.

But only about a dozen satellites now serve the Asian Pacific region and this limits what can be offered.

There are plans, however, to launch many more satellites in the next few years and this would greatly increase capacity and make it possible to market more to this part of the world.

In Hongkong at present, while it is possible to tune in to television programs from neighbouring countries including Russia, American offerings are still restricted to CNN and AFRTS (American Forces Radio and Television Service) and the news feeds from the three major US networks, NBC, ABC and CBS.

None of these channels is scrambled and anyone in Hongkong with the money to install a dish can tune in for personal enjoyment without breaking any laws or infringing any copyright.

/13046

INFORMATION ON COMMUNICATIONS POLICY NEEDED

55500025 Hong Kong HONGKONG STANDARD in English 11 Sep 87 p 6

[Editorial: "A Long Fight for the Freedom of the Airwaves"]

[Text] YOU can't see, smell or touch it. But to economists, the radio spectrum is as much a scarce natural resource as petroleum or fresh water. Recent advances in communications technology and the prospect of more are forcing difficult choices on the relevant authorities in various countries.

Should more space on the radio spectrum be saved for the rapidly growing cellular systems? Or would it make more sense to insist that cellular operators invest extra money to squeeze more phone capacity from their current allotments?

Should a share of the mobile communications frequencies be saved for aircraft-to-ground phones and the possibility of a satellite system that would provide mobile radio service across a given country? Reluctant regulators around the world are being drawn ever deeper into the impossible game of guessing what the public wants, and what technology will be able to deliver.

The air, according to Shakespeare's Henry V, is "a charter'd libertine." But who should be allowed to charter it? Formulating policy on such issues as radio communications is in some ways like playing chess. There is in both cases a need for a strategy which ought to be pursued with coherence and vigour. And in working out that strategy there needs to be foresight.

How do our own policy-makers stack up in this respect? As we are in the communications business ourselves, we would be very grateful if the Government could communicate to us all its well thought-out reasoned, logical policies on communications. All we've been hearing so far is a lot of hot air about the use of the airwaves.

The Government, through the Secretary for Administrative Services and Information, Mr Peter Tsao, has declared that there is room for another commercial radio station in Hongkong. We have, however, been informed by this same Mr Tsao that there is not room for another television station (Teledifusao de Macau) to beam into Hongkong. Doubts have also been expressed over whether there should be one or two commercial television operators in Hongkong.

Predictably, the opponents in the radio battle have conflicting views. Hutchison Telecommunications says there is room for another radio station. The assistant general manager of Commercial Radio, Mr Peter Pun, insists that there isn't.

Mr Pun is worried about advertising revenue for radio (which dropped last year to $101 million from 1985's $106 million). A spokesman for Radio Television Hongkong, meanwhile, has blandly declared that more competition here would be healthy.

It was, however, only a few weeks ago that Mr Tsao publicly reaffirmed the Government's plans to continue funding RTHK. This means that the network has no commercial responsibilities to anyone. And that may be why the head of Radio Three at RTHK, Mr Tony Haynes, has gone on record as saying he is pleased by the prospect of more competition in radio since it could open up new services.

The general public may be less pleased, though, by the Government's rather hazy approach to the formulation of policy on such issues as radio communications. Do our leaders believe that markets rather than regulators should make the decisions? Or do they prefer selective protectionism? Are we just to accept the administration's decisions on an ad hoc basis? Do we have to wait for government officials to tell us whether the sun is out or not? Or whether someone feels it is a fair deal or not?

We might just as well settle the matter by rolling dice. If you throw a double six you can start a radio station; if you throw snake's eyes you can't. Wouldn't this make just as much sense as the current unstructured, uncontrolled lack of policy?

In lieu of policy we have been witnessing inept government meddling that leads only to chaos and confusion. It's a prime example of a trend that has been apparent for far too long in far too many parts of the world.

If commercial radio stations want to start up, and then have to close down because they can't make money, then so be it. What has it got to do with the Government? Similarly television stations. And similarly cable television. Why should Hongkong Telephone's monopoly be protected when Hutchison Cablevision wants to compete? Surely the more competition in the provision of services the better it must be for the consumer. It is an irrefutable fact that the media perform better in a competitive situation. And the closer the competition the better it is for the reader, viewer, listener or user.

In the United States, for example, broadcasters are just beginning to wriggle free of government regulation. Following the lead of the rest of the Reagan administration, the federal agency that oversees the nation's airwaves has decided that it can best protect the public's interests by interfering as little as possible with broadcasters.

We believe that the people who formulate policy here on radio communications should also take upon the issue. They should, we suggest, allow the communicators to fight it out among themselves. Or, at the very least, the Government ought to come up with a cohesive and consistent policy. We can only reiterate here the point made more clearly by Plato at the end of Book One of his *Republic*: "The governor who does not govern for the benefit of the governed is no real governor at all."

/13046

TELEPHONE NETWORK UNSUITABLE FOR CABLE TELEVISION

55500024 Hong Kong SOUTH CHINA SUNDAY MORNING POST in English 6 Sep 87 p 7

[Text] AT least 80 per cent of Hong Kong Telephone's network is unsuitable for cable television, according to engineers from Hutchison – the other major organisation which has made a bid for the territory's pay television licence.

A Telco spokesman yesterday declined to respond to the claims and said it was company policy not to comment on what other organisations said.

Deputy Secretary for Economic Services Mr Rafael Hui also declined to comment, saying it would be inappropriate for the Government to take a public view at this time since consultants were being appointed to examine the question of a second telecommunications and cable television network.

It is widely believed that the British consultancy firm Communications Studies and Planning International, a leading research and advisory body on telecommunications, has been chosen for the study and that the contract would be signed this week.

Mr Melvyn Sears, general manager of the cable television applicant Hutchison Cable-Vision, said the Government had acknowledged that a separate broadband network would have to be installed for cable TV, no matter who the operator was.

For this purpose, about 24,000 kms, or 60 per cent of the world's circumference of cabling would be required. But this would involve only a small percentage of optical fibre, the wiring which comprises part of the Telco network which is already in place.

Optical fibre cables presently linked Telco's 65 exchanges and it was only this tiny proportion of the whole network which was now capable of television grade transmission, said Mr Sears.

He noted, however, that the wiring which actually connected individual subscribers to the exchanges comprised at least 80 per cent of the entire Telco network and this consisted of copper wires which were suitable for telephones but not television transmissions which required co-axial cables.

"The existing telephone network is almost totally unsuitable for cable television because it uses the wrong kind of cable," he explained.

Apart from the extensive work needed to put in co-axial wire for cable TV, even Telco's optical fibre network was also less suitable for sending television signals along because of its great number of exchanges – necessary for two-way telephone transmissions but redundant for TV purposes, Mr Sears added.

Hutchison's plans, he said, called for a network which consisted of only five per cent optical fibre cable linking 13 distribution exchanges as opposed to Telco's 65 to cover the whole territory.

This would cut expenses considerably, [illegible] the completed struct[illegible] cable as well [illegible] switching equipment would be needed for the network.

Apart from Telco having to re-wire at least 80 per cent of its network to make it suitable for cable TV, he also questioned how well the company's existing optical fibre network could cope with the additional load of carrying television transmissions.

Mr Sears said that it took 1,000 telephone channels to carry one colour television channel and a network planned for telephone transmission – as Telco's [illegible] – would lose a lot of its planned telephony capacity if it had to provide 30,000 lines to carry 30 TV channels.

"Telco's network was planned for telephony services and if they have over-provided on the assumption that it would provide capacity for television, who's paid for that?" Mr Sears asked.

If the overcapacity was for a projected expansion of telephony services, its use for television transmission would bring forward the date on which its capacity would need to be enhanced.

Mr Sears was responding to recent claims from Telco that the company could handle up to 90 per cent of the cable TV network using spare capacity from its existing ducts.

He said that there was a great difference between talking about a network of ducts and one of cables.

He acknowledged, however, that if the Government were to permit another company to use the telephone company's existing duct network for cable distribution, as was the case in other countries, the amount of streetworks digging required to lay down TV wiring could be minimised.

But Telco claims exclusive access to its ducts and this position appears to have been accepted, with reservations, by the Government.

Mr Rafael Hui said that legal advice had been taken on this and it appeared that if Telco declined to share its ducts, the authorities could not compel the company to do so.

Although the Executive Council had the authority to do so, it would be unlikely that such overriding would be unilaterally imposed, he said.

/13046

PANEL TO EXAMINE TELEVISION LICENSING PROCEDURE

55500026 Hong Kong HONGKONG STANDARD in English 11 Sep 87 p 1

[Article by Michael Chugani]

[Text] AUSTRALIAN entrepreneur Mr Alan Bond's 26.77 percent stake in TVB is to be scrutinised by the newly formed and powerful Broadcasting Authority.

The authority wants to look immediately into the question of whether new licence rules should allow foreign ownership of television stations.

It will also re-examine if it is desirable under new licence rules for TVB to own hugely profitable subsidiary companies which have nothing to do with broadcasting.

Current laws state a TV station's main business must be related to broadcasting.

Both ATV and TVB's licences run out at the end of 1988 and the Broadcasting Authority has given itself four weeks to produce new licensing rules for approval by the Executive Council.

Existing licensing conditions do not allow foreigners to hold a controlling stake in the two TV stations. Under the present law at least 51 percent of Hongkong's TV and radio stations must be owned by local residents.

But loopholes exist through which outsiders are able to buy shares from Hongkong companies.

The Bond Corporation's $1.4 billion foray into TVB last January, which made it the largest single shareholder, both surprised and worried government officials.

Now that the licences of both the TV stations will be up for renewal at the end of next year, the authority — chaired by Executive and Legislative Councillor Mr Allen Lee — wants to examine the rules to see if they need changing to make sure outsiders are not able to gain control of local stations.

Any move to plug loopholes is bound to get Exco approval given the Government's own concern at the prospect of TVB or ATV falling into foreign hands.

Although the Government last year rejected the Broadcasting Review Board's proposal to force TVB to give up its subsidiary companies, *The Standard* understands the new Broadcasting Authority will nevertheless re-examine the matter.

The authority apparently feels it is duty bound to consider whether it should make it a licensing condition that TVB shed its other businesses because the law makes it clear the station should be involved only in broadcasting.

In siding with TVB against the Broadcasting Review Board last year the Government said it did not want to "penalise commercial success" by ordering TVB to dispose of its other companies.

But the feeling within the authority is that ways can be found to separate TVB's broadcasting activities from its other commercial ventures.

/13046

VIDEOPHONE TO BE AVAILABLE IN 1988

55500027 Hong Kong HONGKONG STANDARD in English 16 Sep 87 p 5

[Article by Fiona MacMahon]

[Text] If the predictions of a phone company executive hold true, the days of phoning your boss, holding your nose and pretending you have a cold may be coming to an end. Your boss may be watching you.

She would see you on her videophone, in which a picture is transmitted along with sound to the receiver.

Mr John York Williams, corporate marketing manager of Hongkong Telephone Company, thinks these phones could be the phenomenon of the 1990s.

"Although I think it will take videophones a while to take off, just like fax initially, when the price starts to fall as it will, I see them simply becoming another household gadget," he said yesterday.

He was speaking at the Hongkong Telephone video-communication demonstration at Cityplaza. The videophone is making its Hongkong debut at the demonstration, where a model is on display. Mr York Williams expected its prototype would be available in the territory next year.

The phone would cost between $20,000 and $30,000 once it was in production, putting it "in the same ball park as the hand-held radio telephone," he said.

At present, videophone service was provided only between certain points so its usage was limited. But Telco planned to introduce a faster transmission system by 1989, after international standards were established next year, Mr York Williams said.

The system, called the Integrated Services Digital Network, ISDN, would be the telephone line of the future, he said. It would enable the telephone companies to provide a number of interactive services on one line.

"Once ISDN is available we really expect demand for the phones to take off," he said.

Even though its present use would be limited, Mr York Williams and Videocom, the videophone's manufacturers, expected there would be a limited market for it when it became available next year.

"We expect to attract the interest of large entities with a number of offices throughout the territory, and those who wish to have conferences without wasting time fighting through Hongkong traffic," Mr York Williams said.

Videocom president Dr Toshio Satoh said present usage was designed to save money and the capacity of the transmission line. The videophone used 1/24 of a video conferencing line, which normally ran on a band of 1.5 megabits per second. If each phone were to have its own line, it would use a band of 64 kilobits per second.

The picture quality is grainy, but it would need to be transmitted at 1000 times the present speed to obtain broadcast quality. This would require a much larger and more expensive transmitter, which would have to be compressed to make the videophone viable, Dr Satoh said.

He expected their most immediate markets to be Japan and the United States. Videophones already were available in both countries and video-conferencing had become popular in the United States.

Mr York Williams said the demonstration was an example of Telco's commitment to introducing new developments in the telecommunications field to the public.

Video-communication demonstrations are taking place at Cityplaza II, Tai Koo Shing and the New Town Plaza footbridge in Sha Tin. The public can attend from 4-7 pm daily, until Friday. As well as a videophone, the demonstration includes a video-conferencing system and a videotex device.

/13046

OFFICIALS CONCERNED OVER BOOST IN MACAO TV SIGNAL

55500030 Hong Kong SOUTH CHINA SUNDAY MORNING POST in English 27 Sep 87 p 3

[Article by Vicky Wong]

[Text]

HONGKONG intends to informally sound out the Chinese Government on how it views plans by the Macau Government-run television station to boost its services and transmission signal next year, the *Sunday Morning Post* has learnt.

Macau's plans have caused concern to the Hongkong authorities since the boost in power would bring programs from Teledifusao de Macau (TdM) into most Hongkong homes.

Since TdM has no restrictions on tobacco advertising whereas Hongkong's two television stations face a total ban in the near future, the Macau move could allow advertisers easy access to Hongkong homes by buying Macau TV airtime.

Another fear is the possible loss in advertising revenue from Hongkong to TdM not only on cigarette commercials, but other products as well and threaten the commercial earnings of the two local stations.

On the technical side, TdM's plans to broadcast on an additional channel would also interfere with local transmissions, which would give the territory grounds to complain to the United Nations.

Hongkong has already informed the Macau authorities about its worries and a formal meeting is to be held soon between the two sides to discuss the matter.

Informed sources said Hongkong had not yet sought the views of the Chinese on TdM's plans.

But it was felt that attempts should be made in view of China's plans to expand its broadcasting services which might also be affected by TdM's moves.

Even though the Chinese might object to the Macau plans, there were doubts, however, on whether their help could be enlisted to present a 'united front' on the issue.

It is understood that previous attempts to hold tripartite talks on telecommunications among the three sides have met with poor response from the Chinese who prefer party-to-party discussions.

Observers have noted, however, that political pressure provides the only practical solution to the Hongkong dilemma since there is no action that the territory could take to force Macau to divert from its announced course.

China's concerns could thus greatly boost Hongkong's case as would objections relayed to Portugal via Britain, or if a complaint were to be lodged with the United Nations' International Telecommunication Union.

As reported earlier in the *Sunday Morning Post*, TdM's plans to transmit on two channels have already brought formal protests from Hongkong on the grounds of technical interference.

If TdM persists, the move could breach the ITU's International Telecommunications Convention to which most countries are signatories.

Even if TdM drops its second channel plan, the station's intentions to dramatically boost its transmission power might also breach the ITU's radio regulations.

Under these, signatory members agree that their broadcasting stations should not apply power "exceeding that necessary to maintain economically an effective national service of good quality within the frontiers of the country concerned".

/13046

NEW CARIBBEAN TELECOMMUNICATIONS BODY ESTABLISHED

55400004 Georgetown GUYANA CHRONICLE in English 18 Sep 87 p 4

[Text]

The Caribbean Telecommunications Union which will be established on October 1, 1988 will have a four-component structure.

The preparatory work, to bring the CTU into being, will be done by an interim administration, headed by an Interim Secretary-General.

Caricom Ministers responsible for Telecommunications, meeting in Barbados recently, also agreed on the structure, financing and future work of the C.T.U.

The Ministers adopted the four-component structure, with a General Council, comprising Telecommunications Administrations of Member States at Ministerial level; the Executive Council which will comprise one representative from each Member State; the Secretary-General as Administrative Head of the CTU, who will be assisted in the execution of his duties by officers agreed to from time to time by the General Council, and two sub-committees to deal with policy and technical issues.

The CTU will assist Member States of Caricom in solving problems regarding frequency incompatibilities which affect them, both at the national and international levels.

It is hoped that by providing easy access to expertise from the Region, the CTU will reduce the high costs of consultancies from extra-regional sources.

The CTU will advise regional Governments on the expansion of telecommunications services in undertaking studies relating to planning and standardising of their operations.

A statement from the Caribbean Community Secretariat disclosed that the CTU will foster collaboration among Member States in seeking technical assistance, and will also maintain permanent contact with various international telecommunication entities, such as the International Telecommunication Union (ITU).

A strengthened and co-ordinated telecommunication sector will offer better levels of communications for civil aviation, meteorology, maritime and disaster planning.

It will also be of great value to the Region in terms of its economic, social and educational sectors, as well as its health, commercial, industrial and other sectors.

Coming out of the Ministerial meeting was also the decision to develop a mechanism which will allow third party traffic among 'HAM' operators in amateur radio in Caricom countries.

/9274

SECOND TV STATION PLANNED; CBC PAY-TV SCRAPPED

55400005 Bridgetown SUNDAY SUN in English 13 Sep 87 p 1

[Text] GOVERNMENT has plans to set up Barbados' second television station. And this includes the scrapping of the proposed subscription television originally planned for the Caribbean Broadcasting Corporation.

A television licence is to be issued to a subsidiary of Barbados External Telecommunications (BET) which is to be set up for the purpose of operating the new television service.

The new company will incorporate others in a joint venture. The Barbados Telephone Company and the Caribbean Broadcasting Corporation will be among parties to the new joint venture.

The second television station is to be modelled along the lines of St Lucia's Cable Vision which now offers about 12 channels of 24-hour television viewing to subscribers.

The second Barbados TV station will offer similar channels on a subscription service which it is hoped will come in at a cost of about $40 per month plus an initial installation fee not yet worked out by planners.

Highly placed sources said that plans are at a very early and sensitive stage and therefore it was not a matter which could be discussed.

In St.Lucia, Cable Vision boasts the best engineered cable television service in the Caribbean which incorporates services like CBC from Barbados and HTS, which are now available through ordinary antenna in St.Lucia. Other services being offered are ESPN (sports), EWTN (religious), CNN (news), the Black Entertainment Network, Discovery (educational), VH1 (music) and FNN (financial).

/9274

CONTRACT SIGNED FOR TELECOM EQUIPMENT PURCHASE

55400006 Port-of-Spain TRINIDAD GUARDIAN in English 29 Sep 87 p 4

[Text]

NORTHERN Telecom Corporation has negotiated a US$3 million contract with Belize Telecommunications Authority, Belize, the largest telecommunications equipment purchase in that country since its independence from Britain in 1981. The contract was signed on September 11.

The company, which manufactures and sells Northern Telecom's products in the Caribbean and Latin America, won the contract in a tendering process.

According to a company news release, the contract was awarded on the basis of Northern Telecom's expertise in digital telecommunications technology, the reliability and feature capability of its products and its competitive pricing schedule.

Under the terms of the contract, Northern Telecom is to supply its fully digital DMS 100/200 switching system with two remote line modules, an associated traffic operator position system, a DMS 10 system and four DMS 10 switches. The agreement also covers outside plant, cable and telephone sets.

According to the release, the programme is to offer several tangible benefits to its subscribers. The quality of service will be enhanced, a greater number of subscriber lines will be available and the system will be more reliable. Upon completion of the programme the installed capacity will provide for more than 19,000 subscriber lines.

The release also stated that the modernisation programme of the network represents part of Belize Telecommunications' plans for privatisation and the taking over of the international services in the near future.

/9274

CHINESE TRANSMITTERS INTERFERE WITH BROADCASTS

55004701 Delhi PATRIOT in English 14 Oct 87 p 1

[By Vineet Dikshit]

[Text] China's high-powered transmitters have been found to interfere with and even block sensitive Indian transmissions and All India Radio programmes.

For the past many years Air Kohima and Air Kurseong have suffered acute interference from Radio Beijing. However, recently a major instance of sensitive jamming has surfaced whereby signals from the Indian time and frequency station have been blocked by the Chinese time station.

With its call-sign ATA-New Delhi—the station, situated in the capital, transmits accurate pulses of Indian standard time (IST) 24 hours of the day. It is an 8 kw low power transmitter. For quite some time it is consistently being jammed by a 25 kw Chinese time station with a call sign BPM. This station is located at a place known as Lintong in Xian province of China (34 degrees 21 minutes N, 109 degrees 11 minutes E).

The Indian time signal station is vital in national interests as its services are put to use almost every day by country's defence in calibrating accurate Indian standard time for logistical purposes. Apart from the Armed Forces, a score of research institutes engaged in atmospheric studies, All India Radio, all the navigational agencies, including the air traffic control and central wireless monitoring organisations, are beneficiaries of this service.

The ATA's time is disseminated via short wave electromagnetic medium. Three frequencies used are 5,000, 10,000 and 15,000 kHz. All of them are jammed by BPM China. The worst sufferer among them is the channel on 10,000 kHz, which is shared by both ATA and BPM.

Counter-steps: The National Physical Laboratory, New Delhi, is the custodian of the Indian standard time and its scientists are manning the ATA. The site of this station is opposite Savitri theatre in Greater Kailash II in South Delhi on a small farm land.

In order to overcome jamming of ATA, the Indian Government has sanctioned funds for installation of 30 kw marconi transmitters. The higher power ATA is expected to be in operation in six months from now.

Interference in IST radio station is not an isolated case of jamming by Chinese transmitters. Last week Prime Minister Rajiv Gandhi, during his visit, was given a petition by affected citizens of Nagaland that some of the broadcasts from Kohima and Kurseong stations of All Indian Radio were consistently being overrun by a powerful battery of Chinese radio stations.

/9274

LAWSUIT CHALLENGES CENTER CONTROL OF BROADCAST MEDIA

Bombay THE TIMES OF INDIA in English 10 Sep 87 p 9

[Text]

By A Staff Reporter

BOMBAY, September 9.

THE Central government's refusal to grant a licence to a private party to establish television and radio stations has been challenged through a writ petition filed before the Bombay high court.

The petitioners, Mr Minoo R. Masani, former Swatantra M.P. and member of the constituent assembly, and Mr P. C. Chatterjee, former director general of All India Radio, said the monopoly created by the government in running AIR and Doordarshan to the complete exclusion to other citizens was ultra vires of Articles 14, 19 (1) (a) and 19 (1) (g) of the constitution.

They prayed that the high court direct the Union of India to forthwith withdraw and cancel an impugned letter of refusal dated April 28, 1987, and permit the petitioners to establish broadcasting stations for radio and television in the western region.

The two applicants said they wanted to set up an independent broadcasting system for radio and television to function alongside AIR and Doordarshan. They intended to set up a public limited company with a board of directors comprising men and women of high standing and integrity as also with a knowledge of the technical aspects of media communications.

A letter dated September 11, 1986, was addressed to then information and broadcasting minister, Mr V. N. Gadgil, for a licence to establish two broadcasting stations, one for radio and the other for television.

They stated in their letter that the purpose in establishing these broadcasting services was to supplement what the governmental agencies were doing both by way of education and information. They sought to purvey these in a manner that would be objective, and not committed, as the government agencies were, to the official point of view.

The Union communications ministry sent a letter to Mr Chatterjee informing him that it would not be possible to grant a licence to set up a broadcasting station. The letter was dated April 28, 1987.

The petitioners submitted that AIR and Doordarshan as departmental limbs of the information and broadcasting ministry functioned under its total control and supervision.

Therefore, the Union government's refusal to permit them to set up two broadcasting stations, one for radio and the other for television amounted to a clear violation of their fundamental right to freedom of speech and expression guaranteed under Article 19 (1) (a) of the constitution.

/8309
CSO: 55500020

PROBLEMS OF TELECOMMUNICATIONS DEPARTMENT REPORTED

Delays in Decisions

55500021 Bombay THE TIMES OF INDIA in English 6 Sep 87 p 10

[Text]

NEW DELHI, September 5: Delays in decisions on the organisational structure and production plans in the telecom sector have been persisting in the context of the persistent talk of imperatives of modernisation.

Senior appointments in the Indian Telephone Industries, the main supplier of instruments and equipment, have been pending for long. Arguments over the future of ITI itself, whether to stay as a single unit or bifurcated on a north-south zonal basis, have continued though the government is reported to be close to a decision.

Also the formal decision is awaited on the choice of technology for the larger exchanges at the electronic switching system factory in Bangalore. It is nearly certain then the indigenous design of the Centre for Development of Telematics (C-DOT) would be predominant.

There has been some debate in regard to the choice of technology for the larger exchanges at the electronic switching system factory in Bangalore. Early in 1983, the government had proposed to set up ESS II with the E-10 technology. This was in the context of the much larger Seventh Plan, involving an investment of Rs 13,000 crores. Eventually, the plan allocation was limited to Rs 4,000 crores only. It did not permit the department of telecommunications to buy switching equipment beyond the range of the capacity of the existing factories of ITI including the E-10 factory at Mankapur.

In fact, within Rs 4,000 crores, it would have been necessary even to limit the planned production of these factories.

The department has been pressing the planning commission and the ministry of finance for increasing the Seventh Plan allocation to Rs 6,000 crores at 1984 prices, which would permit the department to pick up some of the production from the ESS II towards the end of the plan.

It is, therefore, tentatively proposed that ESS II should start producing larger exchanges towards the end of the plan. In this time-frame, it is hoped that larger exchanges of the C-DOT design could be commissioned. But a formal decision in the matter of technology for the ESS II is yet to be taken.

TIME-FRAME

If C-DOT does produce the design with the set time frame, as is claimed, it should be to the credit of Indian engineers and Mr Satyam Pitroda, the man behind the enterprise.

On ITI's part it has acquired the site and planned the buildings. In fact the C-DOT will have a proving process of a sort for larger exchange when a 4,000-line exchange is inducted into the network at Ulsoor, Bangalore. The process should be complete in three or four months.

The mandate of the C-DOT has been to produce a digital switch capable of applications in the cities. Along the way, it has developed 128-port electronic private automatic branch exchange and rural automatic exchanges, as well as a 512-port rural automatic exchanges.

The department of telecommunications and C-DOT have jointly carried out a detailed evaluation and review of the 128-port C-DOT RAX. The dot has tentatively approved the RAX from the point of view of design and performance. A more detailed evaluation from the point of view of reliability in the Indian environment without air-conditioning is, at present, in hand.

The department of telecommunications has also authorised ITI to take all action for producing 100,000 lines a year of these rural automatic exchanges as early as possible. This means about 120 exchanges. The 512-port RAX will be installed and inspected at the cantonment exchange in Delhi.

To productionise these designs ITI will manufacture a family of digital switching systems based on C-DOT technology. It has set up a plant in the Electronic city at Bangalore. This plant has been set up as a result of memorandum of understanding signed between ITI and C-DOT on transfer of technology for digital switching systems of C-DOT design. The plant capacity is planned to reach manufacture of one lakh lines per annum by 1989. This model plant will grow into a digital switching systems division shortly.

INTEGRATED SERVICE

Installation of these digital switching systems will help in digitalising the Indian telephone network to improve the overall service and to prepare ultimately for the Integrated Service Digital Network (ISDN). The digital switching systems incorporate the latest concepts in digital techniques and switching technology.

At the plant, manufacturing is mainly based on assembly line principles. Sophisticated but cost effective machinery and test equipment are used in inward goods inspection, card testing and system integration. The PCB (printed circuit board) assembly employs semi-automatic assembly machines and ergonomically designed manual stations. Instead of very costly general purpose test equipment, cost-effective dedicated test systems are used in card testing and component testing. The various assembly and test stations in the entire manufacturing area are protected against electrostatic discharge.

Computerised manufacturing management system (CMMS) is used to provide a common data base for the production department, for computerised production planning, material management, scheduling and production process control. The authorities have decided to scrap production of the Pentaconta cross bar exchanges. Significantly, the still earlier Strowger type electromechanical exchanges will continue to be inducted in parts of the network.

It is learned that Vietnam has expressed interest in using the Pentaconta system available with the ITI under an aid agreement with this country. Otherwise, the ITI will be saddled with unused spares.

This surplus manpower is being deployed with some training in the electronics factory. A core group of 40 has been absorbed in the factory working on C-DOT designs.

ITI [illegible] other collaboration as well. The Cit-Alcatel tie-up stems from the decision in pursuance of the Sarin committee recommendations for inducting only digital exchanges.

In fact 200,000 lines of Cit-Alcatel E-10 exchanges were ordered and arrangements were made for setting up a production unit at Mankapur to produce 500,000 lines a year of these exchanges.

The initial exchanges have all been commissioned and 20,000 lines of exchanges produced indigenously from SKD components at Mankapur have also been commissioned. The progress of the factory, a unit of ITI, is generally satisfactory.

INDIGENOUS PRODUCTION

Together with the agreement for import of two lakh lines of exchanges and setting up of indigenous production, an agreement was also signed with Alcatel for R and D assistance. This agreement provided for setting up of an indigenous R and D capability with total investment of Rs. 4.87 crores — capital expenditure and Rs. 2.21 crores — recurring expenditure. The agreement provided for development of software, upgradation of the E-10 equipment from time to time as well as joint development of the E-10-5 switch for smaller exchange applications, for which certain new concepts had been proposed.

In the light of the developments of C-DOT, it has been decided not to proceed with the development of the E-10-5 switch. However, the R and D facility is being used for development of software packages as well as for upgradation of the E-10-B switch. In fact, it is proposed to strengthen this facility further so that the E-10-B exchanges are continuously upgraded and kept upto date with applications like remote line units, signalling number 7, ISDN capabilities, improvement in the call handling capacity, cost reduction.

The pact with Face of Italy has been renegotiated to manufacture push button telephones. The revised pact was concluded last week on the basis of certain adaptations of the instrument to Indian conditions. ITI will completely switchover from rotary dials to the push button system as these will easily fit into the digital network.

Also production tie-ups have been formally entered with NEC of Japan for microwave equipment, with ATT and Philips for consoles and with Epe of USA for low cost microwave earth stations.

But all these programmes will be under constraints unless organisational and related uncertainties are ended.

Reorganization Welcome

Bombay THE TIMES OF INDIA in English 15 Sep 87 p 17

[Article by P. Jayant]

[Text]

THE news that the government is planning to reorganise the department of telecommunications (DOT) is most welcome because it raises hopes of improvement in services which depend on the telecom infrastructure.

But one seriously doubts if mere reorganisation could lead to providing such an impetus. What is required is a basic review of the structure of the telecom industry. In terms of telecom resources, 90% or more are being controlled by DOT. But the efficiency with which the resources available in any industrial sector are managed and the rate at which resources are generated for growth very much depend on the structure of the industry.

In view of this, reorganisation only of DOT, because it controls 90% of the resources of the industry, would not necessarily lead to a change in the structure of the telecom industry, which is essential to change its image, its efficiency, its internal resource generating capability and its orientation towards customer service.

Even the creation of a policy formulating body called the telecom commission, consisting mostly of government officials and academicians, would not necessarily lead to structural changes.

The six major issues in the structure of the telecom industry are (a) regulatory policies with regard to structure, provision of services and pricing (b) installation, management and maintenance of transmission facilities (c) development, marketing and provision of services based on the transmission media (d) manufacture/import of equipment (e) certification and acceptance of equipment to be connected to or used in the network and (f) research and development.

The major structural change required is to bring in multiple entities in the areas of designing engineering and marketing services both on the network and manufacture of network equipment. With competition introduced in these two areas, there is no question about the fact that the R&D effort must be completely independent and certification must be by an independent body like the bureau of standards.

At present, all these functions are mostly totally centralised under DOT or various government organisations, except for a move taken beginning mainly in the last few years by permitting entry of non-departmental public and private sector organisations in the manufacturing area.

Out of the six areas mentioned above, the government in fact needs to maintain only the first one under its supervision and open up all others to public and private sector organisations. Each of the remaining five requires special resources and inputs which are available in quantity and quality outside the DOT.

PDN and the PSTN for data communications burdened with a big failure.

In the field of manufacture too, the failure of DOT in meeting internal demands for small and local exchanges, for customer site telephone instruments, for payphones, for hundreds of components needed in the network or even simple telephone instruments — leave aside producing such equipment based on the latest technology — is well-known.

It is only with the creation of C-DOT that the country is seeing a breakthrough in R&D for indigenously suited designs using the latest technology. The independence which C-DOT enjoys and because of which alone C-DOT has been able to spearhead the long awaited change very convincingly demonstrates the need for independence from DOT to make rapid progress in R&D as well as other functions.

The slow process in which certification [illegible] the TEC. One would question the very propriety of a unit of the department [illegible] which becomes a competitor to [illegible] [illegible] small entities manufacturing modems or telephone instruments.

Even in the major field of transmission facilities, the government needs to take actions such as what the British [illegible] for Telecom and the French government have done. The British have opened up the field of providing transmission facilities by [illegible] competition and the French DOT has set a splendid example of how transmission facilities of high quality and reliability can be made available throughout a country for small as well as large customers at reasonable prices within a period of 10 years, and how [illegible] government subsidiaries and private entities can be allowed to compete.

Taking these experiences into account even a limited resource country like ours needs to consider whether the

Continued ownership of resources, which in fact is where the government [illegible] — the poor growth and poor service — could [illegible] the reason for [illegible] control of all the six functions in the DOT.

Even if the government wants to retain control over the telecommunications network for security reasons, it could be achieved easily after separating the regulatory function from service, manufacturing, certification and R&D. The government advisory committee should not be merely a policy formulating body but one which looks into all telecom policy matters of any significance. [illegible] powers which DOT may [illegible] it would have to be similar to that of the [illegible] Commission [illegible] of a policy forming body.

In order to achieve this, the government would have to change the basic concept which today ensures that in [illegible] sectors such as telecom, there would be no competition to the governmental entities.

/9274
CSO: 5550/0021

ELECTRONICS PANEL RECONSTITUTED, MISSION EXPANDED

55500022 Calcutta THE TELEGRAPH in English 16 Sep 87 p 8

[Text] New Delhi, Sept. 15 (UNI): The government has reconstituted the Electronics Commission with enlarged terms of reference.

Besides formulating policies to promote and govern the integrated and coordinated development of electronics in the country, the commission will suggest changes in existing methodology or approaches after assessing the existing policies in electronics.

While Mr P S Deodhar will continue to be the chairman of the commission, Mr K P P Nambiar, secretary, department of electronics will be its vice chairman. Dr V P Kodali, adviser, department of electronics, will be the secretary to the commission.

In addition to Mr Deodhar and Mr Nambiar, the commission will have ten members. They are Mr S Venkitaramanan, finance secretary, Dr V S Arunachalam, scientific adviser to the defence minister, Mr D K Sangal, secretary, department of telecommunications Mr P R Lasey, secretary, department of technical development, Mr S G Pitroda, adviser, centre for development of telematics (C-Dot), Prof U R Rao, chairman, Space Commission, Mr S Prabhala, chairman and managing director, Bharat Electronics Ltd., and Prof B S Sonde, department of electrical, communication and engineering, Indian Institute of Science.

The commission will constantly review the actual growth in the industrial and research and development capabilities in electronics in India in comparison with the goals set by the government as well as global developments. It will also suggest corrective measures, which will have a bearing on government policies.

The commission will provide information inputs to policy formulation through systematic technology forecasting and technology assessment in electronics.

It will identify priorities and thrust areas in electronics, electronic components, materials and processes that would be significant in setting the targets for various sectors of electronic industry, research and development laboratories and academic institutions.

It will also function as a focal point for inter-ministerial coordination of policy matters relating to development of national electronics capabilities.

It will recommend long-term policy directions to various ministries as part of integrated development of activities relating to electronics.

/9274

WRITER OUTLINES GROWTH OF BHARAT ELECTRONICS

New Delhi PATRIOT in English 7 Sep 87 p 9

[Article by S.P. Sud]

[Text]

Bangalore: The story of Bharat Electronics Limited (BEL), a public sector undertaking, is the story of the birth and growth of professional electronics in the country. From a humble beginning just over three decades ago, it has today developed into an electronics conglomerate manufacturing about 400 types of components and equipment, besides total systems.

It is today meeting the total communication needs of the army. Its products have found an ever-growing market not only in defence services but also in Post and Telegraph, All India Radio, Doordarshan, Civil Aviation, Railways, Meteorological Department, entertainment industry and many more.

Talking to a group of Chandigarh based newsmen here BEL chairman and managing director Capt. S S Prabhala said the company's thrust during the next five years would be on growing business in traditional areas. Since the internal consumption of its products was very high and the company has no spare capacity, it has no immediate plans to enter export market. Nevertheless, it was a policy matter to be decided by the government.

Mr Prabhala explained that even otherwise the export of equipment would entail a number of problems. It was not easy to compete with advanced countries who have linkages with colonial countries. Even among the advanced countries the competition was fierce as orders were secured on pre-determined basis. The export would also earn the country the dubious title of being an arms supplier which may not suit the country politically.

The BEL chief, however, hastened to add that the company has the capacity and infrastructure and it would supply the equipment to Third World countries in case of need after meeting the internal demands, keeping in view the economic viability.

The future plans of the company were to enter the field of colour TV picture tube and image intensifiers manufacturing. While infrastructure for the former already existed and the technology transfer was not needed for the latter the company was in touch with about half a dozen European and US companies. The collaboration for importing necessary technology was likely to be finalised within the next six to nine months. Mr Prabhala said the proposal for colour TV picture tube was already there and only the approval of the Board was needed.

Answering questions, Mr Prabhala said the company would not opt for new units during the next three years or so. It would like to concentrate on the consolidation of existing units. The plans were to raise the sales of the company from the existing Rs 500 crores annually to Rs 1000 crores within the next three years.

The company has a strong research and development unit on which an annual investment of Rs 10 to 12 crores is made. About 80 per cent of the equipment being manufactured in the nine units has been designed and developed by this unit.

The BEL has during the last three decades entered into technical collaboration with as many as 21 foreign companies. Three more such arrangements were on the anvil.

Mr Prabhala said prices of

BEL products were estimated to be 15 to 20 per cent lower when compared to the prices in the international market. The country was saving Rs 220 crore of precious foreign exchange on account of internal supplies to the defence forces and other domestic consumers.

He agreed that Airforce and Navy were still importing some communication systems. It was so not because the BEL was unable to manufacture this equipment but because it was cheaper to do so as the requirement was small.

The group of newsmen who were taken round the BEL complex Bangalore were told that the unit began with a capital investment of Rs 75 crore. Last year, its gross block had grown to Rs 125 crore (which was 62 per cent of the company's gross block) and it produced Rs 214 crore worth of products, contributing to 57 per cent of the company's turnover. The workforce has grown from a mere 1000 in 1955 to nearly 14,000 at present.

The Bangalore complex was expected to report a turnover of over Rs 420.20 crore by 1989-90, nearly double the present level. A unique feature of this unit was that nowhere else in the country (and rarely in the outside world) were such a wide variety of electronic equipment and components produced at a single unit.

Initially, the complex began manufacturing radio communication equipment for defence forces. Soon radars were added. Subsequently it diversified its product range to meet the requirements of other professional customers like AIR, Doordarshan, police and para military forces, Department of Meteorology, Civil Aviation and Telecommunications among others. Today, the product range included communication (static or mobile) equipment in MF, HF, VHF and UHF frequency bands for various applications and radio, sound and television broadcasting transmitters, studio equipment and CTV outside broadcast vans, radars in L, X and C bands for Army, Naval, Air and Meteorological applications, sonars, navigational aids and components like ICs, HMCs, MICs, TV picture tubes, microwave tubes, transmitting tubes, quartz crystals, space grade solar cells, liquid crystal displays.

The group was informed that as BEL moves on to hi-tech areas, it transfers its know-how to smaller companies, making itself free to pursue higher technologies. Apart from setting up three plants on a turnkey basis to manufacture black and white TV picture tubes, it has transferred manufacturing know-how of a range of studio type amplifiers for AIR, Doordarshan, exciters for TV transmitters, VHF omni range equipment and distance measuring equipment (under consideration), PT multiplex equipment MF radio beacons, TV deflection components voice frequency telegraphy equipment, among others. In other words, it acts as the fountainhead of technology in the country as regards of electronic fields.

All equipment and components are manufactured to stringent military and international specifications. Extensive quality assurance facilities have been established at the unit to cover the whole range of environmental and reliability tests to ensure the quality of a wide range of products from tiny components to trailer mounted gigantic radars.

The walk-in climatic chamber here is a unique facility in the country which is also being utilised by many organisations including ISRO who tested their satellite APPLE here.

The company has encouraged units in the small sector to the maximum extent possible. The complex has set up an industrial estate near the factory for 18 ancillary units. The complex provides technology, components and materials, monitors their functioning and buys back all their production.

The orders placed on the small scale units last year exceeded Rs 15 crore and the sales of the ancillary units to BEL was approximately Rs two crore.

The unit has been actively engaged in various measures for labour and productivity improvement, through training programmes for human resources development, participative approach to work organisation, suggestion schemes, environmental awareness, protection and control programmes for active involvement in the society including the adoption of a village for development, employment of handicapped persons, a special rehabilitation organisation for 'alcoholics' and a special school for mentally retarded children, have been taken up.

The company runs one of the biggest schools in the country here (with a strength of over 6300 students) which caters not only to BEL families but also the entire neighbourhood. Welfare amenities which foster a congenial industrial relationship include huge fleet of transport and canteen for the entire workforce, housing for a sizable number of employees and a township with a well equipped hospital, auditorium and a sports stadium.

/8309
CSO: 55500019

BRIEFS

INSAT-IC LAUNCH DATE--New Delhi, 17 Sep (PTI)--Yesterday's successful test of the European rocket Ariane has removed the uncertainty over launching India's communications satellite Insat-IC year. Sources in the space department said they are confident that Insat-IC would be launched by Ariane on schedule in June 1988. Ariane had been grounded since its launch failure on May 31, 1986, and India had been worried about placing Insat-IC in orbit to replace the ageing Insat-IB. Sources said the life of Insat-IB would come to an end any time in 1989. They said arrangements have been made with the United States for putting another communications satellite (Insat-D) also next year. It will be a standby for Insat-IC, they said. [Text] [55500023a Calcutta THE TELEGRAPH in English 18 Sep 87 p 4] /9274

BUREAUFAX SERVICE--Madras, 11 Sep--The Videsh Sanchar Nigam (formerly Overseas Communications Service) inaugurated the international bureaufax service from Madras at a function here today. The bureaufax service, which came to Bombay and Delhi three years ago, allows the transmission of documents, sketches, handwritten text or drawings at high speed between India and 23 countries. The document, which should be handed over at the office of the Videsh Sanchar Bhavan on Adams Road, will be transmitted at the speed of a page, a minute to bureaufax authorities in the addressee's country. It will then be delivered either over their facsimile network or by post or over the counter. The charges range from Rs 90 to Rs 125, a page, depending upon the country. The Nigam will also receive documents sent from abroad and deliver them to the addressees in Madras either across the counter or by post. Among the countries to which the service is available are: Australia, Bahrain, Canada, West Germany, Hong Kong, Italy, Japan, the Netherlands, Singapore and the United Kingdom. [Excerpts] [55500023b Madras THE HINDU in English 12 Sep 87 p 3] /9274

LOCAL AREA NETWORK--A local area network for computers called SUPERLAN has been implemented by Aurelec Data Processing Systems at their R&D laboratory situated at Auroville near Pondicherry. It is claimed that the system can interlink computers spread over distances of upto 6 km without sacrificing speed or software compatibility. The system has been installed at REC Tiruchi. It is configured into two independent networks which can communicate with each other. One is configured with 103MB of disk storage, a 45 MB cassette tape streamer (for fast backing up of hard discs), ten high power 10 MHz Aurelec SAT6s PCs with multiple printers, and colour enhanced graphic monitors for engineering workstations. The other SUPERLAN is configured with 145 MB of disk storage and 22 Aurelec EN-88s (PC compatible Enhanced Nodes). From the user's point of view, each node is equivalent to an IBM PC or PC/AT. The data and resources can also be shared by everyone, as on a large multi-user computer. From this point of view, the SUPERLAN installed is equivalent to a large multi-user system. The workstations are located at all departments, with a central mass storage shared by all the users. Each workstation can be configured as per the requirement of its user, with features and peripherals such as EGA, plotter, digitiser for engineering applications; an Aurelec EN-88 at the hostel office (one kilometre away from the central file server) for student mess bill processing. Aurelec's SUPERLAN employs the ARCNET topology, with data transfer rates of 2.5 MB/Sec making it possible to achieve very high speed data transmission. [Text] [55500023c Madras THE HINDU in English 4 Sep 87 p 19] /9274

FOREIGN TELECOM LINKS--Indore, 10 Sep (UNI)--India will have tele-communications links with 30 more countries by the year-end, Union Communications Minister Arium Singh said here today. Mr Singh told reporters that work on laying sea cables to the West Asian countries was likely to be completed by this year. India is already linked with 50 countries, mainly through satellite, he added. Replying to a question about the development of tele-communication in Madhya Pradesh, Mr Singh said a separate programme was being worked out for the cities of Indore, Jabalpur, Bhopal, Raipur and Gwalior to ease the situation. Under the programme, telecommunication facilities would be expanded and the working of the telecommunication network made more reliable, Mr Singh said. He said production of electronic exchanges had been undertaken on a large scale and many bottlenecks removed. A rural electronic exchange (RAC) had been developed and at least one such exchange would be installed on a daily basis in the country. It would benefit the backward areas particularly, Mr Singh said adding that his department favoured development of indigenous technology and curtailment of imports. [Text] [55500023d New Delhi PATRIOT in English 11 Sep 87 p 5] /9274

FIRST SATELLITE PLANNED

Islamabad THE MUSLIM in English 28 Sep 87 p 8

[Text] Karachi, Sept. 27: Pakistan's first satellite called Badr-A is expected to be in orbit by the middle of 1988.

Informed sources told PPI here today that being solely an indigenous project, it proves the technological capability in space of the Pakistan Space and Upper Atmosphere Research Commission (SUPARCO).

It would be an experimental scientific satellite in the field of physics, radio propagation and communications.

/8309
CSO: 5500/4700

EFFORTS URGED FOR PROGRESS IN SPACE TECHNOLOGY

Karachi DAWN in English 1 Oct 87 p 6

[Text] Karachi, Sept 30: The present situation characterised by fragmented and isolated efforts in the space sciences and technology fields must change if the Ummah has to make tangible progress in this important area, said Dr. M.A. Kazi, Adviser to the Prime Minister on Wednesday in his inaugural address on the occasion of the establishment of Inter-Islamic Network on Space Sciences and Technology.

The two day moot of space experts is being attended by delegates from 10 Islamic countries.

The Network would be developed around a centralised data bank based on a large computer system located at the Network Headquarters, SUPARCO, in Karachi. The central data bank will be linked to the national data banks located at the national focal points of the respective participating countries. These national data banks will collect and store data in their respective countries and feed the same to the centralised data bank.

Dr. Kazi said that the economic development of a country now largely depends upon its ability to properly evaluate its resource potential and then to put it to optimum use. Thus the need for quantitative assessment of natural resources, whether agricultural, hydrological or mineral through systematic monitoring of the variation, is a vital point in the national planning process.

The establishment of the network on Space Sciences and Technology represents an important milestone in our efforts to develop our capabilities and acquire self-sufficiency in all important fields of space technology, said Dr. Kazi.

Prof. Dr. Ali Kettani, Director General, Islamic Foundation for Science, Technology and Development (IFSTAD), based at Jeddah, speaking on the occasion said that on the basis of the feasibility studies prepared by IFSTAD, the OIC Standing Committee for Scientific and Technological Cooperation (COMSTECH) had approved the establishment of Inter-Islamic Networks in the following six areas and to have their headquarters in a country most suitable for the purpose.

1. Oceanography (Turkey); 2. Biotechnology (Egypt); 3. Tropical Medicine (Malaysia); 4. Water Resources (Jordan); 5. Space Research and Technology Applications (Pakistan); 6. Renewable Energy Resources (Pakistan).

Dr Kettani said that a total of 17 member states of the OIC had already joined the six Islamic Networks; more are expected to join as IFSAD is discussing the modalities with other member states.

Action Plan: The second meeting of COMSTECH held in Islamabad under the chairmanship of President General Mohammad Zia-ul-Haq in December 1983, had approved an outlay of 654 million dollars for the first 5-year science and technology action plan and which is part of a 20-year model plan prepared by the Committee for development among Islamic countries.

The decision to establish the space network was taken at the third meeting of COMSTECH held in Islamabad in November last year under the chairmanship of President Zia-ul-Haq. The decision was approved at the Fifth Islamic Summit held in Kuwait in January this year.

Priorities for the first five year action plan, as indicated by the 1983 COMSTECH meeting, are space sciences, oceanography, water management, tropical medicine, biotechnology and renewable energy resources.

Among these, space is an endeavour in which the Islamic countries find themselves particularly weak. Even though Indonesia gave the lead by launching its first communication satellite in 1976, its development and launching was largely done by the Western agencies. Since, the PALAPA series of Indonesian satellites are providing good communications between the 13,500 islands of Indonesia.

Thereafter, in the early eighties, 22 Arab countries pooled their resources in an organisation called ARABSAT. Their first communication satellite, the Arabsat, was launched over two years back. The project was conceived on a turnkey basis and is based on western technical know-how and R&D.

Headway: Pakistan happens to be in a more promising position in terms of self-reliance as it has made headway in R&D in the field of space. A low orbit scientific satellite, Badr-A, is nearing completion and is expected to be launched sometime next year. Badr-A is wholly an indigenous effort, all its sub-systems and equipment have been fabricated by Pakistani scientists/engineers.

Pakistan has also been fabricating its own rockets and has been sending scientific pay-loads up to 450 km up in space through its locally fabricated 3-stage rockets.

It also envisages to send two communication satellites--the PAKSATS in geo-stationary orbit over the Equator (36,000 km height), but the progress in this endeavour has been tardy perhaps due to financial stringency. The development of PAKSAT may have to be taken by some foreign agency, and so, very considerable finances are involved in the project.

The Inter-Islamic Network on Space Sciences and Technology is to promote cooperation in the field among Islamic countries and thereby can enhance self-reliance. It will also help in pooling up resources for the implementation of the space projects in hand.

The Founding Meeting is being attended by 10 Islamic countries--Bangladesh, Indonesia, Iraq, Morocco, Niger, Saudi Arabic, Tunisia, Turkey, Jordan and Pakistan playing the host. Ali Kettani, Director General, IFSTAF, is also participating in the deliberations.

Dependence: Earlier, Mr Salim Mehmud, Chairman, SUPARCO, while welcoming the delegates said that through advances in computers and communication space science and technology is leading the world into an area of information age which no country can afford to ignore. While the Islamic Ummah countries are sharing these benefits in varying degrees, they are more or less totally dependent on the advanced and industrialised non-OIC countries for the availability of these benefits.

He said that the total financial outlay of all the OIC countries is about one-five-hundredth of the corresponding figure for the USA alone. Notwithstanding the obvious constraints and limitations that handicap the Islamic world, several OIC countries have been engaged in space application programmes for quite some years now. Resource data from remote sensing satellites and meteorological satellites data from weather satellites are being made use of by a number of OIC countries.

The Network will be helpful towards launching of a joint programme of Islamic Ummah in space technology, he said.

The Meeting in the technical sessions, in progress, will largely address itself to the organisational and institutional aspects of the Network, including its budget and programme.

/8309
CSO: 5500/4700

UZBEK PAPER ATTACKS ANTICOMMUNIST RADIO PROPAGANDA

Methods of Psychological Warfare

Tashkent PRAVDA VOSTOKA in Russian 15 Feb 87 p 3

[Article by K. Alimov, PRAVDA VOSTOKA political reviewer: "Methods of Psychological Warfare"; first paragraph,PRAVDA VOSTOKA introduction]

[Text] Throughout the world a new type of political thinking is being ever more widely established. The voice of reason is becoming increasingly louder. However, the voice of the opponents of the new thinking is becoming increasingly intrusive and venomous. The masters of the radio voices in the various languages have one root--anticommunism. The fresh breeze of restructuring in our society is not to its liking. The radio voices are thinking up increasingly refined methods of lying and slandering socialism and its peace-loving foreign policy. For this reason, the editorial board of the newspaper PRAVDA VOSTOKA and the Uzbek department of the Soviet Political Science Association have decided to jointly publish articles about the psychological war, its methods, and its radio warriors. The psychological war was born in the depths of Goebbels fascist propaganda, and its warriors are the former of the Motherland who have earned themselves a base life by slandering their former fellow citizens. We have paid particular attention to the activity of the editorial board of the radio station Ozodlik, which broadcasts in Uzbek.

American propaganda, through its use of Jesuitical methods, turns everything upside down--it calls the African dushmen liberators, and it calls the pioneer camps in which the children of the DRA are resting concentration camps. The traitors of the Motherland from Ozodlik impudently debate about protecting the sovereignity of the republics of Central Asia. Different radio voices have discovered a new target for themselves--"the Soviet Moslem world--and they are conducting a concentrated volley against it. And today the Voice of America's total foreign broadcasts amount to more than 1,000 hours each week (578 hours broadcast by the Nemetskaya volna [German Wave] and 728 hours by the BBC). In 1986 alone the psychological war took $973.6 million from the American taxpayer's pocket, which was $177.7 million more than in 1985. And expanding the American war and modernizing its arsenals will cost around $1.3 billion. From a central station in Washington Voice of America programs are sent by satellite or via ordinary radio broadcast to 101 transmitters, 68 of which are located outside U.S. borders--in the FRG (close to Munich), Greece, Liberia, the Phillipines, Sri Lanka, and many other countries.

Programs are broadcast in 38 languages; however, the number may vary in relation to "successes and failures" of the psychological war. If the battleship Nimitz sent artillery fire to Lebanon and Libya, then two battleships in the Persian Gulf are using radio to continually bombard our republics.

The theory and practice of psychological warfare was developed during World War II when the very same term arose. "To use any means for the purpose of affecting the morale of any population group for military purposes"--thus is the essence of psychological warfare in German and American military references.

They took care not to compromise themselves by the systematic dissemination of lies, paying great attention to the problem of masking propaganda's true source. It is precisely here that one should look for the main cause for the distinction between "white," "grey," and "black" propaganda.

When distinguishing between these types of propaganda, the authors of the manual "Conducting Psychological Warfare" write the following: "1. White propaganda--propaganda that is disseminated and acknowledged by its source or its official representatives. 2. Grey propaganda--propaganda whose special source is not identified. 3. Black propaganda--propaganda that is represented as coming from a source other than its true source."

In his textbook entitles "Psychology for the Armed Forces," the America psychologist Boring pointed out that "grey" and especially "black" propaganda have the "advantage" of irresponsibility because they permit the spread of rumors and scandalous information without discrediting the government behind the propaganda.

Created in 1942, the Voice of America began its activities solely in English. The station Radio Free Europe, however, has broadcast in Polish, Czech, Slovak, and Hungarian since 1950.

Another loudspeaker in the psychological war is the separate radio network that was created by the United States in 1951. At first it bore the provocative name Liberation. Later, however, after Dulles' liberation doctrine had failed, the station became known as Freedom (Radio Freedom). This radio network, whose operating headquarters is also located in Munich, was created to conduct psychological warfare exclusively against the nations of the Soviet Union. "The main task of Radio Freedom is to cause dissatisfaction among the peoples of the Soviet Union" are the words that American researcher John Scott used to characterize the essence of the radio network's activity.

And so, an extensive network of institutions was created in the 1950's to wage psychological warfare that in turn has become the main tool in waging the cold war and implementing the aggressive doctrines of "suppression" and "liberation."

In conclusion, it would be well to remember the words of the great American Abraham Lincoln: "You can fool all the people some of the time, and some of the people all of the time, but you can't fool all of the people all of the time."

The organizers of the psychological war are trying to fool all the people all of the time. And the means and methods that they are using for this purpose will be discussed in the next article.

"Amerika," Disinformation Campaign

Tashkent PRAVDA VOSTOKA in Russian 17 Feb 87 p 3

[Article by E. Alimov, PRAVDA VOSTOKA political reviewer: "'Amerika,' Disinformation Campaign"; first four paragraphs, PRAVDA VOSTOKA introduction]

[Text] Like hyprocrisy and sanctimony, pharisaism has deep roots.

What persona in literature was a virtuoso in the art of pharisaism and perfidy. Memory turns the pages of books, scans names, and finally the name Iago leaps out.

Insidious conclusions, inside-out arguments, incitements, a network of strategems--all of these are nothing other than the methods of American propaganda whose name is Iago. This comparison is not the fruit of abstract thought but rather a direct association that arose during an examination of excerpts from the new television serial "Amerika." Every infamy and base act of American propaganda was manifested in the selection of the time and target. The whole world is the witness of the wide-scale peaceful offensive of the USSR, which announced a program to deliver humankind from nuclear arms, and the American television broadcasting company ABC decides to badger Americans for 14 1/2 hours with anti-Soviet falsehood about the occupation of the United States by troops from the USSR and United Nations [UN]. In my view, Iago has struck. The film hasn't even been shown yet, and already the Americans themselves have protested. The owners of the firm Chrysler have refused to finance the film and have pulled their advertisements that were to be run during the serial.

And the propaganda in the name of Pharisee was miscalculated--America was not capable of believing the type of falsehood in Amerika. The directors of ABC were dumbfounded when Soviet representatives proposed purchasing the serial and showing it to Soviet viewers to see how the organizers of psychological warfare operate.

The reigning imperialistic circles have created a complex system for the ideological persuasion of the masses. The system includes a set of parts that have been called upon to use different means to accomplish one and the same task--to divert laborers from the class struggle and to undermine the world democratic and revolutionary movement. It is as if the ideological and propaganda apparatus of imperialism has several tiers, between which there is a rather distinct distribution of roles.

At the source of propaganda, on the peak of the ideological Olympus there is a comparatively small group of theoreticians (U. Rostow, D. Bell, R. Aron, Z. Brzezinski, and others) who pretend to the position of spiritual pastor of the current bourgeois society. Their task is to formulate "new" ideas, develop fashionable concepts, update obsolete arguments, and set the tone in ideological life...

At the next tier these ideas are worked over to fit the interests and inquiries of different audiences. Here general positions are dressed up into popular forms and illustrated by specially selected facts. Depending on whom specifically is being addressed, some positions or others are arranged with the necessary accents.

And finally all of this is issued as the mass propaganda of anticommunism that chooses any means for its weapons--all the way down to direct disinformation so long as everything works in the specified direction. The real devil's sabbath of the "yellow press" begins.

I will review the history of the term "yellow press." In 1894 in pursuit of a reading audience, one of the fathers of propaganda, Herst, introduced a cheap Sunday supplement--the pictorial story of a small boy from the slums under the title "The Yellow Kid." Since that time cheap editions that capture the reader's attention by using sensations, shocking pieces of information, and various trifles have received the name "yellow press." One American critic has defined its methods in the fight for profit as "a competition for sewer pipes."

One of the biggest experts on bourgeois propaganda, P. Nor, stresses the enormous significance that disinformation has acquired in international politics in the last few years. He writes, "History will most likely choose the expression 'cold war' to characterize our half-century, but I believe that it is better and more precise to call our period 'the half-century of disinformation.'" This is a rather keen definition.

An analysis of the sociological propaganda being conducted both on the "home front," i.e., on the population of the United States, and for the foreign audience shows that it uses different myths and social prejudices to manipulate social consciousness. Researchers specializing in bourgeois ideology, in particular the American sociologist G. Schiller, single out five manipulating myths that have been instilled into the consciousness of radio listeners, film and television audiences, and newspaper readers.

Myth 1 has to do with the people's personal freedom and individual choice, which are represented as only being available in capitalist society under conditions of "free enterprise." As G. Schiller, the aforementioned professor at the University of California, has very perceptively noted, this myth serves the interests of the governing elite since it suggests that private property is the only reliable basis for the well-being of society. The myth of personal freedom is embodied in such social stereotypes as "the American dream" and "the American way of life"...

Myth 2 is about neutrality and the class independence of social institutes such as the government, mass media, educational system, etc. This myth is sealed with the more popular concepts of "formulated capitalism" and "popular capitalism." By thus transforming capitalism, the government has emerged as an arbiter that protects the interest of such strata of the population as farmers, workers, and low-ranking employees and opposes monopolies. This is confirmed as if the government currently acts "neutrally and in an unbiased manner" and the mass media and information services function as spokespersons of public opinion and serve the interests of society as a whole.

Myth 3 concerns the invariability of human nature, the aggressive nature of human behavior, and man's deep individualism. It is as if the press, radio, television, and cinematography are giving the public what they want.

Myth 4 asserts the absence of social conflicts in modern American society, or as they say, under conditions of "transformed-capitalism" in the United States there exists a "popular capitalism" that arose as a result of "dispersion" and "diffusion" of property, the "managers' revolution," and "equalizations in income." Social conflicts have been dislodged by conflicts between personalities.

Myth 5 concerns the pluralism of the mass media that serves the broadest layers of the population and responds to fundamental policies of the so-called theory of "social control" over the mass media. G. Schiller has convincingly proved that a large number of newspapers, journals, radio and television networks, and Hollywood films act in concord and that this has come about as a result of the identity of the interests--both material and ideological--of their proprietors, as well as because of the monopolistic nature of the entire mass media industry.

In trying to disseminate these and similar ideas to the masses, the ideologists of imperialism count not so much on convincing as on a different type of method of attaining a psychological effect of an emotional order. In general, they appeal not to reason but rather to feelings and habits originating from the traditional tenor of bourgeois society.

If propaganda is being conducted against the population of the socialist countries, then it is above all the vestiges of the past that are being exploited in people's consciousness.

The essence of the matter is that all information passed through the filter of the bourgeois agencies--radio and television--creates a deliberately distorted picture of the world, tendentiously confusing ideas in its evaluation of political phenomena. In the final analysis, this makes it possible for bourgeois propaganda to ideologically corrupt and disarm the laboring masses. And the information doesn't always necessarily have to resort to direct falsification of the facts. In any one instance, one piece of information or another is stressed above all others and presented as a sensation; in another instance, the same piece of information is concealed in a number of similar events where the colors are softened and the accents are shifted.

Exposing just this aspect of the matter, one bourgeois specialist in America propaganda, L. Fraser, wrote, "On what emotions can propaganda play, either directly or indirectly? The answer is to all of them. To the simple emotions like fear and to the complex emotions like pride or love for adventure, to the base emotions like greed or to the good emotions like compassion or self-respect, to the egotistical emotions like ambition or to emotions directed toward others like love of family. All human emotions and instincts have at one time or another given propagandists a means of impacting (or trying to impact) on the behavior of those toward whom it is targeted."

By making it difficult to understand social phenomena and thereby cutting people off from the real world, such propaganda essentially deprives people of their capability of sorting out the reality surrounding them.

In his speeches and official announcements, President Reagan really loves to quote from letters from brave sailors and "Green Berets" who were involved in Washington's attack on Grenada or in Lebanon. To judge by these letters, these brigandages have been undertaken with a single purpose--to save the "free world" from communism. And, as the military personnel cited by the White House are absolutely convinced, its "intrigues" are global.

12794
CSO 5500/1043

ALCATEL, AEG, NOKIA MERGING MOBILE TELEPHONE ACTIVITIES

5500A006 Paris L'USINE NOUVELLE in French 29 Oct 87 p 33

[Article by Jean-Pierre Jolivet: "Alcatel, AEG, Nokia on the Same Line"; first paragraph is L'USINE NOUVELLE introduction]

[Text] The three firms join forces to develop the cellular mobile phone. At stake is the European market in 1991.

Alcatel NV, the Finnish firm Nokia, and AEG [General Electricity Company] of Germany will develop the digital cellular mobile telephone which Europe will use as of 1991. The three firms plan to invest more than Fr 600 million in this program, the details of which are still under discussion. At Alcatel NV, however, the tasks have been assigned: The French ATR subsidiary will develop the radio portion and the mobile parts; SEL will be responsible for the development of the network infrastructure and the interfaces. According to Pierre Suard, CEO of CGE [General Electricity Company], "the important thing is to be ready to move when the European PTT's issue their call for bids in 1988."

The world's second largest communications company was obliged to act following its abortive attempt at cooperation with Philips and Siemens at the end of 1984. By 1991 the European mobile phone market will represent a potential of 10 million subscribers and nearly Fr 120 billion for the following decade. The major European manufacturers acted wisely in seeking partners. Ericsson linked up with Matra Communications in France, with Siemens in Germany, and with the British firm Orbitel (a Racal Electronics and Plessey joint venture).

This dual alliance gi[illegible]lcatel several advantages. The Finnish firm Nokia--which is ahead techn[illegible]ally--looks like the European leader in mobile communications when c[illegible]ed with Ericsson, whereas AEG will bring its strengths to the field of digital circuits. For its part, Alcatel NV is strengthening its telecommunications components position. Its Belgian subsidiary Mietec is acquiring access to the design and manufacturing process of specific integrated circuits which SGS-Thomson sold to Alcatel.

To these advantages Alcatel is planning to add another in the sales field: The CGE subsidiary hopes to be selected to supply the equipment used in the second French mobile phone network. It is joined in the bid by the two firms, Lyonnaise des Eaux and Generale des Eaux, with equipment from Motorola and... from Nokia (analog technology).

25050

SWEDEN'S ERICSSON, FINLAND'S NOKIA INTERNATIONALIZING

Helsinki HELSINGIN SANOMAT in Finnish 13 Oct 87 p 31

[Article by Heikki Arola: "Structural Change Hits Telecommunications Firms Hard; Ericsson Believes It Is One of Future's Biggest"]

[Text] Stockholm--The telecommunications industry is in the midst of an international structural change to which both Nordic telecommunications firms, Ericsson of Sweden and Nokia of Finland, are adapting in their own ways. Ericsson believes in its bigness, Nokia in flexibility and quickness.

Recent events have upset the self-satisfied corporate tradition of L.M. Ericsson, Sweden's oldest multinational megafirm. Factories have been closed, production has been reduced, and the consortium is undergoing a troublesome, internal structural change. Workers are being transferred from production to planning.

Just how rough it has been in recent years for Swedish firms to turn a profit is revealed by the fact that people have begun to call Ericsson an enterprise in crisis, even though profits in its weakest year, 1985, were 844 million crowns. Last year profits rose slightly to 934 million crowns.

The drop was severe, because profits had remained steady at over 2 billion crowns for many years.

Ericsson was hurled downhill by establishment of the information systems unit. The consortium bought Datasaab and Facit, and under its own name started to sell entire computer systems. A big investment in U.S. markets was made at the wrong time. The unit suffered a loss of 804 million crowns in 1985.

Surprisingly, that same year the consortium's strongest line, telecommunications, also sank. Profits in 1984 were 1.93 billion crowns; 2 years later they were 1.165 billion.

Strong Measures

Those figures roused the consortium leaders into taking strong measures. Massive layoffs were averted, although the work force has been cut by almost 10,000.

Bo Landin, the consortium's director of strategic planning, believes that the profits which rose slightly last year will continue to climb during the next few years. He does not disclose, however, what sort of timetable the consortium leaders have for boosting profits to an acceptable level. In a firm the size of Ericsson, acceptable profits run between 2 and 2.5 billion crowns.

"We have a deadline, of course, but there's no point in stating it publicly. In this industry, anything can happen along the way," says Landin.

Naturally, Ericsson has compared its profits with those of other giants in the telecommunications industry. Landin does not want to rank the companies but says the profit trend of other firms is similar to Ericsson's, despite the fact that nearly all the major competitors have bigger domestic markets at their disposal.

Landin sees several factors, common to all competitors, in the decline of the telecommunications industry.

One of them is the rising cost of research and product development. The development of each new system requires more money than ever before, that of a telephone exchange, for example, several hundred million marks. This trend is changing the industry's entire structure. An ever larger share of firms' expenditures is going into planning and programming, while the manufacture of equipment decreases proportionally.

The change puts a strain on the firms' budgets. It costs money to shut down factories and turn blue-collar workers into white-collar employees.

Bad Timing

Landin does not consider Ericsson's heavy investment in information systems an error as such. The error was only in the timing. The investment was made at the very moment a drop in market demand began, though this was not perceived until afterwards.

Landin says that the error lay in making the investment too broad in both geographic range and product assortment.

The last 3 years, the remedy has been to focus on reducing product assortment and withdrawing from certain markets. Ericsson concentrates on IBM-compatible workstations and minicomputer families in Europe and the United States.

Just Beginning

Impressive mergers have occurred in the international telecommunications industry, but Landin thinks the structural change is just beginning.

The reason is the cost of product development. Huge volume is required to be able to develop complete "system families."

Landin predicts that in 10 years there will be only five or six companies in the world which have the capacity to develop basic technology in the field. Ericsson figures to be one of them, and the others roll easily off Landin's tongue: Alcatel in France, Siemens in Germany, AT&T in the United States, and Telecom in Canada. Also included are one or two companies in Japan, with Nippon Electric in the lead.

As consolation to Nokia and other small, mostly national, manufacturers, Landin says that they, too, will have an opportunity in the future. But they will depend on the big companies' basic technology; by purchasing it, they can develop their own applications. Landin believes that this picture of the telecommunications industry's future also holds true for the computer industry.

The small firms will not necessarily become second-class manufacturers, according to Landin. By specializing, they can preserve their spots in the international forefront. Landin says that at this point he has faith in Nokia, which must, on the other hand, seek out more frequent collaboration. "With Ericsson, for example," remarks Landin. "I think both sides would benefit."

Agreements

In recent times, one of Ericsson's top goals has been to sign collaborative agreements with other firms. Ericsson deals with the development of basic technology and supplements it with agreements for specialized areas. In Landin's opinion, the agreements make certain that Ericsson will not need to merge on the model of Asea and Brown Bover.

Ericsson signed an agreement with Texas Instruments for research on microcircuits. At the same time, Ericsson acquires some of its circuits from Texas.

With IBM, Ericsson develops programming for telephone exchanges. This collaboration assures the compatibility of Ericsson and IBM systems in the telecommunications solutions of the future.

For development of the digital mobile-phone network to be built in western Europe during the next decade, Ericsson entered into collaboration with Siemens in West Germany and Matra in France. The Siemens agreement concerns product development only; the Matra agreement covers both production and sales.

Nokia-Mobira is already involved in joint production with Matra. Landin does not consider it impossible that in the future a joint Matra-Ericsson-Nokia unit will be formed in France.

Ericsson regards its admission into the French state enterprise CGCT a major victory. Its rivals were all of the world's large-scale companies. Ericsson considers its technical know-how the key to the decision, although outsiders have seen political reasons behind the French government's choice.

Finland

What is the future of Finland Ericsson in the changing consortium? The Raahe factory was closed a year and a half ago. At the Kirkkonummi plant, the firm now has about 900 workers, a third of whom are in production, a third in planning, and a third in sales and management.

Landin asserts that the future of Finland Ericsson is not threatened. The company was founded for Finnish markets; it has controlled those markets and will likely continue to do so.

The second reason is the company's outstanding planning group, which is useful and beneficial to the entire consortium, according to Landin.

Through the Finnish company, the consortium can gain access to Soviet markets when and if they open up, which depends on the wishes of the U.S. government.

Landin believes that the Soviet markets will gradually open up so that, for instance, merchandise which was sold in the West 4-5 years ago can be exported to the Soviet Union next year.

In addition to the Finnish company, other channels would be direct sales from Sweden or license sales via Yugoslavia, something which Ericsson has gone in for earlier.

West European Digital Network Divides Business Firms Into Groups

The decision of West European telecommunications establishments in favor of a joint digital car-phone network again divides the industry into groups. Springing up are markets whose value is estimated at tens of billions of marks during the next decade.

Ericsson has already striven to secure its position by signing collaborative agreements with local companies, with Siemens in West Germany and Matra in France.

Nokia has not allied itself with anyone for the moment, but Yrjo Sirkeinen, marketing director for Nokia Data Communications, says that Nokia intends to be a leading firm in the digital field.

The telecommunications establishments are investing approximately 20 billion marks in the networks so that roughly 10 million customers can have their own data terminal equipment.

According to the timetable, the digital network will be ready in European capitals in 1991. Two years later it will expand to airports and the largest cities. The network will cover the highways in 1995.

The manufacturers' interest is assured by the fact that the next in line are the even bigger markets of Canada and the United States.

Number One

Yngve Ollus, managing director of Finland Ericsson, considers Ericsson's prospects in digital networks excellent.

Ericsson counts itself number one in the world among suppliers of complete systems, i.e., data terminal networks, telephone exchanges, earth stations, and data terminal equipment. Ericsson estimates it controls 45 percent of the world markets.

Ericsson achieved its leading position by constructing the Nordic NMT system. Ericsson built an NMT-450 network in Finland, too, but the Central Board of Mail and Telecommunications ordered the new NMT-900 telephone exchange from Nokia.

The NMT system now exists in 16 countries. Ericsson estimates that 750,000 of the current 1.7 million mobile phones belong to the systems it built.

Ericsson has designed and installed the systems in Spain, Holland, England, and Switzerland. The Austrian network was made by Motorola, Siemens of West Germany, and Matra of France.

Nokia is building an NMT system in Turkey. There should be about 80,000 customers in that country by 1990.

Experience

Yrjo Sirkeinen says that Nokia officials are now mulling over a suitable approach to the digital markets. He does not regard as overbold the talk about Nokia's chances of being a leading supplier.

"We are number one in the world right now in data terminal equipment. We are the only company which has had the functional telephone exchange of the NMT-900 network at its disposal for half a year. Ericsson is just now building one in Switzerland.

"Of the third required element--a support station--we have several years of experience. So the technical foundation is there."

The digital systems differ so much from the current ones, however, that a big job of research and development lies ahead. Nokia is not overwhelmed by the expense involved, according to Sirkeinen.

Sales of data terminal equipment for digital networks will be unrestricted, just as they have been up until now. Sirkeinen expects the markets to open up even more when companies outside the European Community become involved.

Most of the markets' overall value will derive from data terminal equipment, in Sirkeinen's opinion, though the markets will concentrate at first on the shipment of systems.

At the Same Time

Finland will get a digital network at the same time as the rest of western Europe, says Aimo Koski, radio department director of the Central Board of Mail and Telecommunications. The network's coverage is not discussed very precisely in the agreement, so that the construction pace will vary from country to country.

Making a digital network is fairly easy on the basis of the NMT-900 network, according to Koski. Except for the radio equipment that comes to the stations, everything else is ready.

The telecommunications establishment now provides roughly 400 million marks a year for construction of NMT networks. That sum will remain about the same even after construction of the digital network has begun.

Koski Does Not Believe in Philosophy of Bigness

One of the good things about the complete transfer of Telenokia into Nokia's possession is that the state became a partner in the Nokia consortium, says Timo H.A. Koski, a member of Nokia's board of directors. The state switched from ownership in a subsidiary to ownership in a concern.

Koski considers it natural for the state to be involved one way or another in a company which controls a significant part of the Finnish electronics industry and two of its primary sectors, the data communications industry and the television industry. Koski hopes the partnership guarantees that interest will be shown in the future of this industry.

Nokia's desire to take complete possession of Telenokia is based on the change in the industry's nature. In its day, the company was born around one product, the telephone exchange. Over the years, in connection with this product, the Nokia consortium began to sell some of its other merchandise.

The telecommunications industry has changed tremendously, in Koski's view. It has traditionally been data communications firms which made telephone exchanges, switchboards, links, and transfer systems. It will not make much difference in the future whether we speak about systems for telephones, computer networks, satellite television, cable television, or radiotelephones. It will not matter whether the system is fixed or mobile.

Both technology and clientele are changing, which changes business firms, too. In Koski's opinion, the word telephone is already a thing of the past. The system does not distinguish between voices and data, or other impulses, which run through it.

In the international picture, Koski does not believe in the philosophy of bigness. If it worked, a company like Nokia Electronics would never have been born. Koski is convinced that when the term data communications covers apparatus from televisions to computer networks to telephone exchanges, there will be plenty of room for companies like Nokia.

The increasing cost of research requires active participation in international research projects, license agreements with various manufacturers, and quickness in adapting basic technology, all of which have been Nokia's trump cards thus far, in Koski's view.

12327
CSO: 5500/2408

TURKEY, FINNISH FIRM SIGN AGREEMENT FOR MOBILE PHONE SYSTEM

Helsinki HELSINGIN SANOMAT in Finnish 10 Oct 87 p 40

[Article: "Follow-up Agreement for Nokia-Mobira in Turkey"]

[Text] Turku--Nokia-Mobira has signed an agreement to export a mobile phone system and accompanying telephones to Turkey. The agreement is valued at over $10 million.

At stake are an expansion of the NMT (Nordic Mobile Telephone) system and an agreement to continue the collaboration begun a year ago between Nokia-Mobira and the Turkish Board of Postal Service and Telecommunications.

The Finnish firm has designed and built Turkey's mobile phone system in record time. The system consists of automatic exchanges, support stations, and telephones. Also involved in the project is Nokia Data Communications, which supplies exchanges to the network.

Turkey's NMT system was opened in the Ankara and Istanbul areas last October, 6 months after the agreement was signed.

In accordance with plans, the network has also expanded within a year to Bursa, Izmir, Antalya, and Adana, as well as the terminals in between them. The Turkish Board of Postal Service and Telecommunications estimates that there will be nearly 80,000 customers for the radiotelephone network by the year 1990.

There are now more than 4,000 customers for Turkey's mobile phone network. Customer capacity is 6,000.

Nokia-Mobira is Turkey's only supplier of mobile phones. Constructing the telephone network in Turkey has also brought with it subcontractor activity, since the installation work is done with local manpower.

Talks about implementing the system's third expansion phase have begun between the Salo firm and the Turkish Board of Postal Service and Telecommunications.

12327
CSO: 5500/2414

MOBILE PHONE SYSTEM FOR MADEIRA ORDERED FROM FINLAND

55002415 Helsinki HELSINGIN SANOMAT in Finnish 22 Oct 87 p 30

[Text] Turku (ZS)--Nokia-Mobira will be supplying Madeira with a specially-built auto-telephone system with telephones which it has designed. The Portuguese Post and Telegraph Administration has ordered the system. Construction of the network is to begin next year.

During the first phase Funchal, the capital of the island, and its vicinity will be covered. In future the network will probably be extended to include the whole 260,000-inhabitant island. Nokia-Mobira will also supply the network with support stations, a total of 14 of which are needed on the island.

Developed by the Finnish firm, the system is designed especially for use by communities, businesses and industrial plants. "The system to be supplied to Madeira is a completely new one and it will not compete with cellular systems. It provides an alternative for situations in which the local population is scattered over a wide area and the number of people is small," manager Mikko Koivumalo said.

The support stations and control center that are part of the system will be supplied to Madeira by the Nokia-Mobira Espoo plant and the telephones by the Aanekoski plant.

11466

GOALS OF EUREKA'S COSINE PROJECT EXPLAINED

Luxembourg IES NEWS in English Aug 87 pp 9-10

[Article by Dr. Peter A.J. Tindemans, chairman of the COSINE Policy Group: "COSINE Bridges IT Industry and Research Communities"]

[Text] The time is ripe to capitalise on the established European-wide acceptance of the seven-layer Open Systems Interconnection Reference Model in a practical way. The EUREKA project "Cooperation for OSI Networking in Europe" (COSINE) serves a dual goal: to make present-day research networks in Europe interwork, and to create a large home market for the European information technology industry. This means elaborating on the concept of functional standards, in order to really open up systems of different makes for services that belong to the working environment of scientists and engineers. COSINE aims at having available as soon as possible a number of operational information and communication services to any researcher in Europe, from the north to the south. Until definition of future networks such as ISDN and IBCN, these service nets remain limited to remote terminal access, message handling systems (MHS), file transfer access and management (FTAM), directory services and network operations and management.

As a EUREKA project, COSINE is supported at government level by various European countries, as well as by the Commission of the European Communities (CEC). Governments participating in COSINE as well as the CEC will contribute to the international interworking of network services in several ways. COSINE's implementation management for new services can be underscored significantly. Governments assist in defining the scope and tasks of national research networks and bring those into accordance with the COSINE specifications. Those recommendations can be given official or even mandatory status. In addition, through demonstrations and procurement, governments can assist in the dissemination of COSINE's results to new categories of professional users of network services.

Existing Technology

COSINE deliberately chose to work with existing technology, as it wants to have operational interworking at the shortest notice. The program selects OSI standards, which already have met widespread acceptance, and will develop operational services for those. For COSINE, the technical specification work implies selection of services, definition of hardware and securing interconnection of national data communications services. Meanwhile, the ever ongoing process of specification of existing functional standards will be reinforced by COSINE. At present, development efforts of the information technology industry depart from the 1984 sets of standards of CCITT and other bodies. Prior to the adoption of new standardisation guidelines in 1988, COSINE provides feedback from the information technology industry and user groups to the standardisation bodies.

In order to be as practical as possible, the EUREKA project focuses on a systems approach. A successful example of such an approach has been set in the automotive industry with MAP (Manufacturing Automation Protocol). MAP has been developed by General Motors Corp., USA, as a networking asset for its subsidiaries and subcontractors in the struggle for life with the Japanese automotive industry.

In the COSINE framework, a systems approach on the one hand follows the interests of the information technology industry for market pull, as it is based upon functional standards as defined by the OSI Reference Model, CEPT, SPAG and CEN/CENELEC. Similarly, services are always based upon products that have passed conformance testing by major industrial testing facilities for OSI implementation. SPAG Services AG (Standards Promotion and Application Group) and COS (Corporation for Open Systems) are bodies committed to this task.

Largest Community of Users in Europe

On the other hand, the systems approach also meets the needs of research communities throughout Europe. COSINE intends to build and expand the largest single community of users of electronic information systems in Europe. It reaches out to researchers at universities, industrial laboratories and independent laboratories for applied research. Cooperation with the Commission of the European Communities means that the present RARE community (Reseaux Associes pour la Recherche Europeenne) can be assured to encompass also researchers in EEC programs such as RACE, BRITE and ESPRIT. Together with participating researchers in EUREKA projects, this means that an extensive potential of professionals and scientists can be served by the COSINE initiative. In the near future, even user groups beyond this community such as commercial professionals will benefit from the achievements of COSINE.

Bridging the interests of both the information technology industry and the vast numbers of researchers in user groups throughout Europe, COSINE elaborates on the results of RARE. Under the auspices of this body, academic networks are being specified in a growing number of European countries. The specifications and implementation recommendations of COSINE will help the expansion of existing RARE networks now prevailing in academia into circuits of the information technology industry as well as into circuits of end users in other industrial environments. To this end, COSINE provides for managerial support and procedures for migration of these networks in line with the OSI Reference Model.

COSINE is about an organisational and managerial problem, rather than a technical one. Europe can gain an edge over the United States and Japan by broadening the community of users that adheres to OSI standards.

CSO: 5500/A003

FRG RESEARCH GROUP PROPOSES INFORMATION NETWORK

Bonn TECHNOLOGIE NACHRICHTEN-MANAGEMENT INFORMATIONEN in German No 462, 28 Aug 87 pp 7-8

[Text] Modern telecommunications, allowing access to geographically distant resources, has led to a new style of working known as "telecooperation." This possibility of sharing work will have the same meaning for the production of intangibles that long distance transport had for tangible goods.

This was the conclusion reached by the Commission for Computer Centers of the FRG Research Society (DFG) in its recently published "Memorandum on Networks," which points out the need for modern telecommunications technology in technical institutes and their cost. The commission maintains that in order to defend the FRG's traditional leadership in communications technology, it is essential for FRG technical institutes to promote widespread development of future oriented forms of these new techniques. For this pu.pose it proposes the creation of a network investment program which over a period of 6 years would ensure that the most modern communications technology is comprehensively provided in FRG technical institutes.

The commission maintains that an investment of DM182 million spread over 6 years is necessary. The investment program should be implemented quickly, with the financial participation of the federal government, since the efficiency of the new communications structures can be guaranteed only if these structures are available nationwide. Additional expenditure by technical institutes for network maintenance has been estimated at a total of DM10-15 million nationwide.

The committee of scientific experts has asked the PTT to take special measures to reduce its fees--which are prohibitive, even with today's slow data links between technical institutes-- to tolerable levels.

Thanks to telecommunications, scientists who specialize in either similar or in different disciplines can cooperate in teams, irrespective of their place of employment. Examples of this are:

--multicenter studies in medicine involving data analysis;
--intercontinental cooperation in elementary particle physics among scientists with access to supercomputers;

--the exchange of product specification models in engineering, as well as of analysis and construction data.

The DFG's network memorandum may be obtained free of charge from the editor of TECHNOLOGIE NACHRICHTEN.

8701
CSO: 5500/M029

NOKIA CHAIRMAN ON INTERNATIONAL COMPETITION, NMT NETWORK

55002416 Helsinki HELSINGIN SANOMAT in Finnish 22 Oct 87 p 30

[Article: "General Manager Kairamo: More Free Competition for Data Communications"]

[Text] Geneva (STT)--In Nokia general manager Kari Kairamo's opinion, free competition for data communications must be increased and standards made uniform. In the speech he gave in Geneva at the International Telecom Fair on Tuesday he stressed the fact that genuine competition in the data communications market is a force that is aimed at the development of technology and services.

In the end, in Kairamo's opinion, the end-user will benefit from liberalization. He emphasized that in the data communications trade we should concentrate on removing, in conformity with the international standardization process model, all those obstacles that are not connected with tariff issues.

Kairamo said that he hoped that Europe's GMS digital network would pave the way for a worldwide mobile telephone standard. After all, the Nordic NMT network has already demonstrated the benefits of international network systems for individuals as well as business firms.

"In the future services will be more decisive than equipment. They will give data communications officials a chance to offer their customers effective, advantageous product, quality and service alternatives and thus especially the end-users will benefit," Kairamo emphasized.

The international telecommunications industry organization, the ITU [International Telecommunications Union] organized the Telecom Fair. Fairs are organized once every 4 years. This year there are about 1,000 exhibitors from different parts of the world.

UN General Secretary Javier Perez de Cuellar delivered the Telecom inaugural address. Kairamo took the floor on this occasion on behalf of the world data communications industry.

11466

IMPACT OF TELECOMMUNICATIONS REFORM

Tax Relief for Business

Paris LES ECHOS in French 14 Oct 87 p 7

[Article by Valerie Lecasble: "For 3 Million Companies, Value Added Tax on Telephone on 1 November"]

[Text] Only 2 weeks from now, French telephone subscribers will receive a bill that will from now on show a cost, excluding taxes, per unit of telecommunications of 61.6 centimes and a monthly rate of 32.88 francs. To reach the total, one must add the value added tax (VAT) of 18.6 percent to make it 73 centimes per unit and 39 francs rate per month, all taxes included. What interest is this to the consumers? None, for private individuals: they will continue to pay the full price as they were accustomed to doing previously.

However, for the 3 million companies that come under the VAT—which excludes banking establishments—this will enable them to deduct this total, or 18.6 percent, and that on receipt, from the bill. The effect, over a full year, is estimated at 6.8 billion francs, or the major part of the easing of company costs expected in 1988, ahead of the professional tax (2 billion) and the general expenses (1.2 billion).

Furthermore, as Gerard Longuet suggested in a press conference: "Taxing the DGT [General Directorate for Telecommunications] and bringing it closer to the common regulations is a factor in the prospect for autonomy and competition. It is also an encouragement to lowering prices."

Perhaps, but at the same time the operation promises to be expensive for the DGT. The introduction of the VAT to telecommunications, obtained by hard struggle against the Ministry of Budget, was so obtained on condition that the measure be financially neutral for the Treasury. Yet, in fact the DGT, in order to come under the common regulations accepts paying more than it did before.

Certainly, the total levies in the general budget will be on the decrease (see table), declining from 15.9 billion francs in 1987 to 12.5 billion in 1988 (including 2.3 billion under the VAT category that the DGT will not be authorised to recover on its investments, since an interim rate of 50 percent was set, with the normal level of 100 percent not going into effect until 1991).

However, at the same time, the burden on the DGT resulting from introduction of the VAT will be 9.8 billion in 1988, or the difference between the 12.1 billion that it will pay to the Treasury for all its traffic and the 2.3 billion that it will recover on its investments. This means the DGT's total payments to the state general budget will be 22.3 billion francs (levies plus taxes). Thus, a rising total compared to the 15.9 billion last year.

A paradoxical result, immediate increase in levies for an administration that has constantly been calling on the contrary for their reduction, or even a halt to them. However, in the perspective of 1992, this step has the advantage of moving in the direction of harmonization of European tax policy, except for the Netherlands and the FRG. Marcel Roulet, director general of telecommunications, explained: In particular, "the productivity trend of the DGT is 6 percent a year. The better to benefit from this to reduce rates and move in the direction of competitiveness of companies."

Telecommunications Financial Flow into General Budget

	1986	1987 (TTC)	1988
	(in billion francs)		
1. Taxes			
Tax on wages	0.654	0.658	0
Common regulations VAT	-0.3	-0.59	9.781
Total taxes	0.36	0.1	9.8
2. Levies			
Payments to general budget	6.15	8.68	2.68
Electronics industry subsidy	2.561	2.36	2.307
Data processing plan for all	0.45	0.45	0.45
CNES [National Center for Space Studies]	4.309	4.377	4.762
Posts assistance	4.3		
Nondeductible VAT			2.348
Total appropriations	17.8	15.9	12.5
3. Total taxes and levies	18.1	15.9	22.3

Source: DGT

It should be noted that the total VAT to be paid to the Treasury in 1988 will be 9.8 + 2.3 = 12.1 billion francs.

Also, the total telecommunications flow plus rate payments subject to VAT paid to the Treasury will be 22.3 - 6 = 16.3 billion francs.

More generally, the DGT is continuing its progress toward real costs. "The loss in traffic earnings due to the change per telecommunications unit from 77 to 74 and then 73 centimes, and the increase from 12 to 13 seconds in the interurban pulse duration is estimated at 2.7 billion francs," Marcel Roulet believes. Also, several increases that occurred in May bring in 550 million.

The same logic prevails: to encourage the company, which represents 55 percent of the DGT's traffic, to consume more, since the company has greater elasticity of demand in relation to cost. The logic of the approach is clear over the long term. While it benefits the companies, this is not the case for the private consumers.

Furthermore, it fails to include the necessary reduction in the debt of the DGT, which devotes 14 percent of its operation costs to financial expenses,

compared to 3.2 percent for British Telecom, 7 percent for NTT, and an average of 5 percent for the European administrations.

Increased Competition

Paris LES ECHOS in French 20 Oct 87 p 17

[Interview of Marcel Roulet, director general of telecommunications, by Regis Marti; date, place not given]

[Text] [Question] You said recently that increasing competition in the telecommunication sector is now inevitable. Gerard Longuet's draft law proposes a two-speed freeing. In your opinion, how will the DGT manage this transition, both internally and in relation to the external environment?

[Answer] Mr Longuet has opened a file and is trying to stimulate a debate. From now on, what is structural in the world of telecommunications is the influence of the international context, along with, in particular, the specific issue of the Europe of 1992 and the American deregulation, as well as factors that amplify or accelerate the consequences of technological mutations.

This evolution is causing the traditional frontiers of the monopolies to disappear and to interpenetrate telecommunications, data processing, and the audiovisual. This progressively makes rivalry and competition inevitable, at least in certain fields. The problem is to adapt to this, and from this aspect Mr Longuet's working paper has the merit and the purpose to open a file, to stimulate a debate, and to examine the conditions in which the various actors in French telecommunications—not only the DGT, but also the other actors, the manufacturers, the service companies, and the customers—can prepare themselves.

In regard to the DGT, the problem is to examine, in the light of its environment, how it is situated in respect to this European landscape: what are its assets, its possible handicaps, what are its adaptations to be made so that it will reach this horizon under good conditions.

[Question] In regard to the international cooperation among businessmen, but also in respect to the manufacturers, what does the DGT expect from the opening of frontiers?

[Answer] The great challenge for the European businessmen is to construct the Europe of telecommunications. A good example of what should be done is what the Scandinavian countries have achieved. Despite the diversity of their organizations, they have been able to establish a coordination that is both pragmatic and effective. They have tried to arrange that their diversity

should instead be a benefit by making the effort to find very flexible formulas.

I believe that the telecommunications businessmen of the EEC should be inspired by this example. There are two methods toward this. On the one hand, in the services of the switched network (telephone, switching of packets, data, and soon the Integrated Services Digital Network), to have a European network that will make it possible to meet a large range of professional needs.

Then, there are the more specific needs, specifically the high output digital links or establishment of networks. Let us take the example of a company whose headquarters is in Paris and which wants to establish a specialized link with Milan and Frankfurt; it will have several dialogue participants, a complicated invoicing system, differing tariff structures, and possibly different standards. It will also have to determine that the interface between the businessmen is more or less satisfactory and that they will not inevitably have the same delays on both sides.

The solution is to try to have at one point a single representative to take charge of all aspects of the contract: commercial, technical and operational.

[Question] The pulse of Europe is already beating at the 1992 rate. Is it not too late today to limit oneself to the European frontiers?

[Answer] Certainly, Europe is not enough, but it is at least a necessary condition for learning to improve and expand our cooperation with the United States or Japan.

It is noteworthy that the Scandinavian countries, for example, have become leaders in the field of mobile radio-telephone because for the past more than 10 years they have been able to organize among themselves.

I do not think that the organization and progress in European integration of telecommunications has the goal to create frontiers and to produce a telecommunications policy to shelter behind. Moreover, the DGT's traffic with the EEC countries is 70 percent of the DGT's international traffic. Also, it is not only the EEC, but also all the other European countries. There is the Europe of the EEC twelve and also the Europe of the EPTC (European Posts and Telecommunication Commission), where there are 26 of us.

[Question] In your view, what will be the consequences for the French manufacturers of the new telecommunications landscape?

[Answer] The French manufacturers are undoubtedly ahead of the businessmen or customers, because they have already progressively organized to put themselves on the European or world level. Specifically, this is true for Alcatel, Matra, SAT/TRT, etc. The size of the industrial investments to be made leads to groupings that only make sense on the world level.

In my view, the manufacturers are aware of this. The opportunities will open up with the expansion of the markets. At the same time, with the competition becoming more open, it will be necessary to be very competitive, to have the right range of products at the right moment, and thus to pay close attention to a good development strategy. A form of solidarity is necessary between the businessman and the manufacturers. For example, we must have the right orientations of technical developments for the international market in order to help our suppliers.

[Question] On the international level, does not the creation of the joint company IBM/SEMA-METRA/Paribas/Credit Agricole show the limits or risks of this new situation? In this case, did not the state make a decision that is harmful, at least initially, to the French producers?

[Answer] Everyone knows that it had become difficult to control the development of the value added networks, which have in fact developed in various fields (banks or air reservations, for example). Likewise, this would have penalized our economy and disrupted the development of these networks.

I believe that what was sought was achieved. It is a regulation aimed at managing this evolution. First, responding to the economic needs, and organizing and controlling them in such a way that there is no possibility of deviation, for example, pure and simple resale of traffic. A certain number of guardrails should make it possible to insure that there is no diversion, and also that there is no risk of dominant position, of a closed system, hence the importance of the regulations.

I believe that after a slow introduction, but one that has led to a very interesting dialogue with all the parties concerned (customers, service companies, etc.), the Ministry of Posts and Telecommunications has arrived at a balanced law, which, it seems to me, enables development of the networks while protecting the interests of the state, the public operator, which is the DGT, and (perhaps more important in the long run) the customers.

[Question] How would you describe the new telecommunications landscape, French, European and worldwide, for the next 5 years?

[Answer] There are turning point periods in the history of telecommunications, for example, in 1977-1978 there was a worldwide recognition of digitization, which had been previously disputed. Perhaps we are going to witness the same phenomenon for integrated services digital networks. There is also the ascent toward high output transmission and communications with mobile phones.

The most important phenomenon—and Telecom 87 well portrays this—is the internationalization of telecommunications, which assumes special prominence for the Europe of 1992. In this field, it enables one to understand what harmonization of country situations is going to require. It will be necessary that the European businessmen (who are simultaneously our colleagues and our competitors) have in the Europe of 1992 not identical situations, but similar ones, whether from the aspect of organization, for example, separation of the functions of regulation and operations; the aspect of openness to competition; or, obviously, regulations and tax or financial situations.

I believe that in this respect the European "Green Book" on telecommunications enables a good understanding of what will be the European telecomunications landscape in 1992, and of what each country has to do to approach it under good conditions. On the technical level, France is in the vanguard, particularly in the digitalization field, packet switching, or teletext. It is true that it has a lag to make up in the field of mobile phones, however, overall it is in a very good position, and it should now concentrate on adapting on the structural organization level.

9920
CSO: 5300/2419

ITALIAN ROLE IN EUROPEAN TELECOMMUNICATIONS EXAMINED

Telettra CEO Interview

Milan BUSINESS in Italian No 9 Sep 87 pp 112-115, 116-118, 124-126

[Interview with Raffaele Palieri, managing director of Telettra, by Serena Cipolla; date and place not given]

[Excerpt] [Question] Well, let us start to talk of Italy's late development...

[Answer] Correct, Italy's development in this sector is behind schedule but we are already rushing to make up for lost time. Positive signs, for example, are the recent measures taken by the Italian government to increase existing investment plans. The government seems intent on speeding up the development process to enable Italy to strengthen its presence in the telecommunications sector. The government support is considerable: 10 trillion lire, in fact, have been allocated to research investments. This is a sizable contribution established by the Ministry of Scientific and Technological Research (MRST) and it indicates the country's determination to strengthen its presence in an increasingly competitive world market. But there is still more.

[Question] But will the governmental support prove sufficient to get the Italian industry back on top?

[Answer] First, Italy's alleged backwardness in the sector is not as serious as it is said to be. Italtel and Telettra, for example, are two companies that complement each other: the former specializes in the switching sector and the latter in transmission systems. And these two areas generate considerable innovations. As a matter of fact, our transmission systems have gained footholds and are now in a position to compete with all other systems in the world.

[Question] Therefore, could we say that we are not the very bottom of the class at an international level?

[Answer] Italy boasts a highly advanced sector of strategic components. Let us just mention the recent establishment of a research and production laboratory specializing in radio links. We can measure up to the most advanced companies that have long been operating in the sector. Proof of this is that Telettra is the only company exporting 50 percent of its production. This implies that we are independent in terms of know-how and also explains the reason why we have so many ties with the MRST and IMI (the examining body of all the requests).

[Question] Telettra has factories in Argentina, Mexico, South Africa, Spain, and Norway. In 1986, consolidated sales volume amounted to 555 billion lire, but this figure climbs to 750 billion if we include what has been produced by the following Telettra subsidiaries: Telettra Telecommunications, Telettra International, and Autofan Italiana. In 1986, the company ran up orders for a total of 915 billion lire, an increase of approximately 20 percent over 1985. Telecommunications, therefore, represents a growth-oriented area and such an important group as Fiat could hardly be excluded from the business. The major companies operating in the sector have all the right credentials to expand rapidly. The leading economic dealers believe that telecommunications will start to play a strategic role. Let us try to outline the prospects.

[Answer] Information dissemination will gain growing importance thanks to the technological innovation level that was reached over the last 5 years. Not only major users but also all those carrying out economy-related activities have realized that the use of an effective telecommunications network can entail numerous economic advantages, such as: cost reduction, increase in operational performance, possibility of improving competitiveness at a national level but, more importantly, in international markets. Telecommunications are to be viewed as the infrastructure par excellence, as was once the case with highways.

Markets will soon cease to be separate, watertight compartments and the barriers that still divide them are falling. According to EEC regulations, all restrictions and limits on trade and exchanges in Europe will be eliminated by 1992. By 1992, therefore, we will have to be well prepared. No country will be able to rely on protectionism; everybody will have to work with high qualitative standards, operate effectively, and be economically competitive. These are the basic reasons for the importance of the telecommunications sector.

[Question] Therefore, it is of vital importance to place the emphasis on research and invest adequate financial resources.

[Answer] Correct, but this also calls for large capital, and it is no accident that 1,300 out of 5,000 people employed by our company are engaged in research; the same happens in Italtel.

[Question] But do you really believe that it is sufficient to increase research investments to make Italy competitive in the international market? Products alone are not always sufficient, while a well defined and basic strategy often plays a vitally important role.

[Answer] I am deeply concerned with this aspect. I should not face this problem, but it is a matter of crucial importance. As a matter of fact, no guidelines of industrial policy were drawn up for the telecommunications sector in Italy, although the present situation urgently calls for a prompt solution of this problem.

Public investments should be coordinated. There is a trend of growing investments in what, going beyond telecommunications, is called telematics.

Some days ago the minister of industry in office emphasized the need for defining an industrial policy for this sector. All I can hope is that his intention will take concrete shape soon.

[Question] In the meantime Telettra has been strengthening its presence and gaining in prestige by setting up Telit, 50 percent of which is privately owned and 50 percent state owned. The company establishment caused a number of quandaries, since, following drawn out negotiations, Telettra, which is part of the Fiat group, now has a 48 percent interest in Telit, while Stet, which is a state-owned company, has another 48 percent interest and the remaining 4 percent is held by Mediobanca. No one, trade unions included, managed to keep out of the ensuing storm of protests. Do you agree that Telit, which is a company of considerable strategic importance, should be managed by one of the leading economic groups in Italy, such as Fiat?

[Answer] We simply made an already existing collaborative relationship official. In 1981, Telettra and Italtel signed a commercial-technical agreement, which already envisioned all prospective rationalization possibilities of both companies' activities in the area of public telecommunications, switching, and transmission systems. The reason why Telit was formed was that changes in the competition required a stronger presence of Italy in the sector. Furthermore, Telit's establishment was expedient to provide the basis for prospective cooperation agreements with international partners. But to accomplish this, the two companies necessarily needed to be run by the same management and share the same sphere of interests. Fiat clearly revealed its intention to keep operating in the telecommunications sector and Italtel was the obvious partner to choose. Now we have to find market outlets together. We will incur heavy expenses and therefore our primary goal is to penetrate a market that is today much wider than before. Telit marks an important turning point for Italian telecommunications. This is our great chance and it should be considered and exploited as such.

[Question] Therefore, you are certain that Italy will employ great energy and considerable financial resources in the future in an effort to catch up on the telecommunications sector. The present trend is that of forming joint-ventures, stipulating technical-commercial agreements, and merging companies to concentrate financial and technological resources as much as possible and thus be in the position to strategically penetrate the world market. This is substantiated by the technological centers established by the leading sector companies and multinationals also at a European level. The situation seems clear enough, but what prospects will open up for small and medium-sized comapnies involved in this business?

[Answer] If we are succeeding in stimulating the development of this sector today, this has also benefited small and medium-sized companies that have been willing to cooperate. These companies will be able to play an important role, if a [development] policy of vertical type is adopted. Small and medium-sized companies are not likely to play a primary role, but nonetheless they will prove to be excellent partners, provided that they realize that it is absolutely necessary to make some decisions. The primary decision consists in working with high qualitative standards. Then, the goal to be pursued is economy of scale economy: the more the development of technology tends to shorten the commercial lifespan of a product, the greater is the need to broaden the market, which also is an essential condition for spreading out research and development costs on a wider basis.

[Question] Therefore small-sized companies will be required to adapt themselves to changes...

[Answer] Today there are plenty of small and medium-sized companies and their number will keep on growing as the sector develops in the future. Therefore, we will not be able to decide the optimal structure of these companies until then. Maybe they will have to merge, separate their activities, or join larger companies.

However, the two vital elements to be considered are product quality and professionalism. It need only be recalled that our late development is also due to a lack of adequate human resources.

[Question] You are therefore referring to training. What do you mean exactly?

[Answer] There are not sufficient professionals in Italy to be employed at the highest telecommunications levels. Compared to some years ago, the situation has slightly improved thanks to the decreasing separation between school and industry. However, we are still not in the position to meet the demands expressed by the companies operating in the Italian market. Today, as in 1985, the ratio between the level of employment and that of interviews held by IBM to increase its staff was 1 to 30. At Telettra the ratio is 1 to 14. The data mentioned above is not encouraging at all, particularly if we consider that Telettra invests 10.6 percent of its sales volume in the research sector, which is an area of vital importance for the future development of the sector.

Chart 1

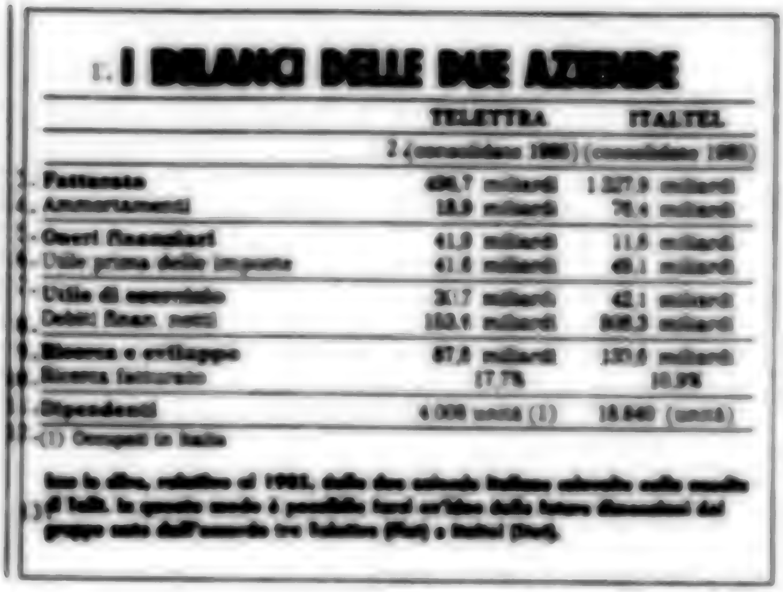

1. I BILANCI DELLE DUE AZIENDE

	TELETTRA	ITALTEL
	2 (consolidato 1983)	(consolidato 1983)
3. Fatturato	498,7 miliardi	1 227,9 miliardi
4. Ammortamenti	18,9 miliardi	78,4 miliardi
5. Oneri finanziari	41,9 miliardi	11,6 miliardi
6. Utile prima delle imposte	41,6 miliardi	49,1 miliardi
7. Utile di esercizio	30,7 miliardi	42,1 miliardi
8. Debiti finan. netti	153,4 miliardi	808,3 miliardi
9. Ricerca e sviluppo	87,8 miliardi	133,6 miliardi
10. Ricerca fatturato	17,7%	10,9%
11. Dipendenti	4 000 unità (1)	18 840 (unità)

12. (1) Occupati in Italia

13.

Key:

1. The two companies' balances
2. Consolidated
3. Sales volume
4. Amortization
5. Financial burdens
6. Non-taxed profit
7. Income for the year
8. Financial, net debts
9. Research and development
10. Research sales volume
11. Personnel
12. (Employed in Italy)
13. These figures relate to the two Italian companies involved in the establishment of Telit in 1983; by means of these figures it is possible to get a picture of the future dimensions of the group set up by the agreement stipulated between Telettra (Fiat) and Italtel (Stet).

Chart 2

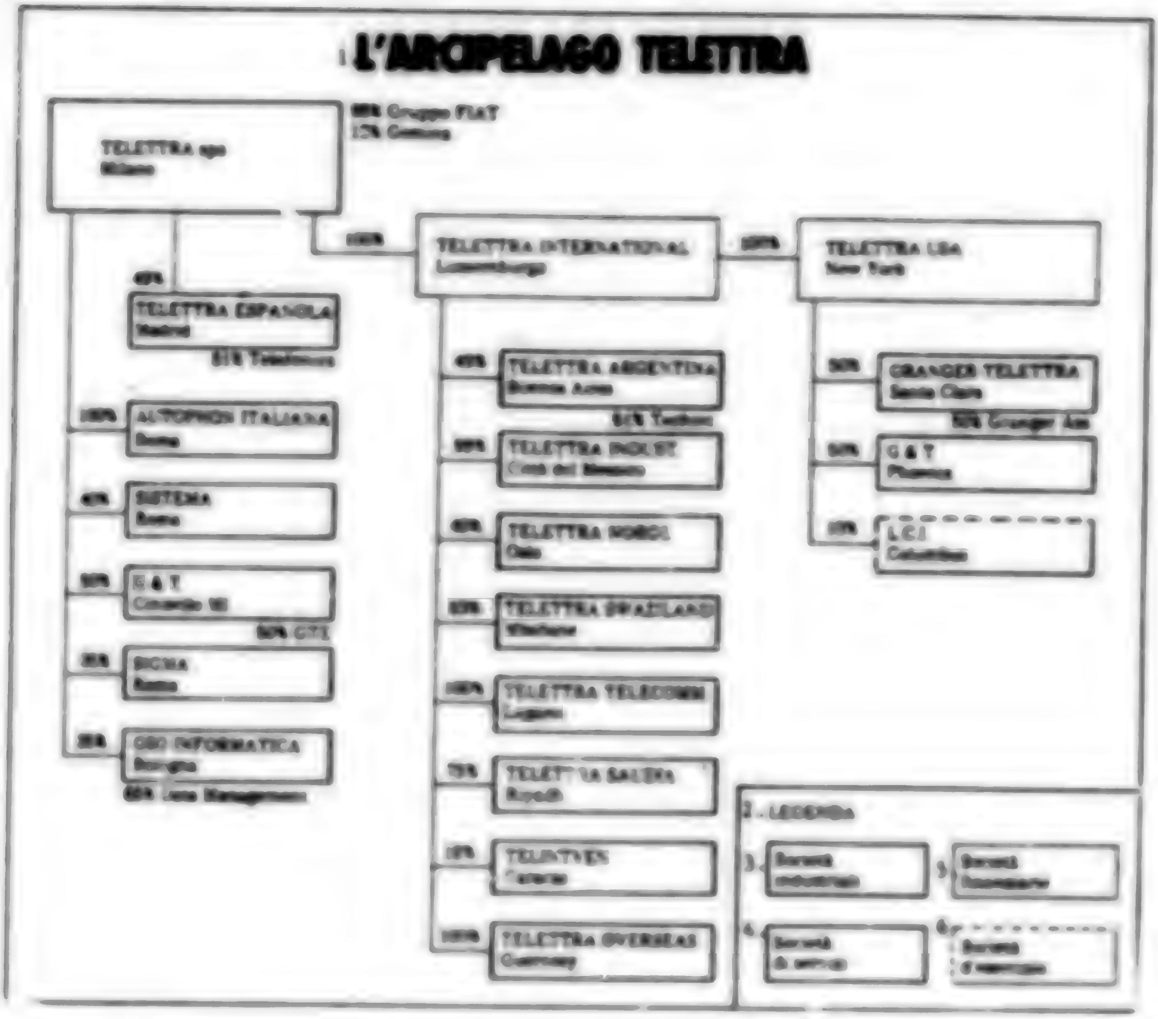
1 L'ARCIPELAGO TELETTRA
Gruppo FIAT
TELETTRA spa
Milano
TELETTRA INTERNATIONAL
Luxembourg
TELETTRA USA
New York
TELETTRA ESPANOLA
Madrid
Telefonica
AUTOPHON ITALIANA
Roma
SISTEMA
Roma
G & T
SIGMA
Roma
OBI INFORMATICA
Bologna
TELETTRA ARGENTINA
Buenos Aires
TELETTRA INDUST
TELETTRA NORGE
Oslo
TELETTRA BRAZILAND
TELETTRA TELECOMM
Lugano
TELETTRA SAUDIA
Riyadh
TELINTVEN
Caracas
TELETTRA OVERSEAS
Guernsey
GRANGER TELETTRA
Santa Clara
Granger
G & T
Phoenix
L.C.I
Columbus
2. LEGENDA
3 Società industriali
5 Società finanziarie
4 Società di servizi
6 Società di gestione

Key:

1. Telettra's numerous affiliates
2. Caption
3. Industrial companies
4. Service companies
5. Holding companies
6. Management companies

ISDN, Fiber Optics R&D

Milan BUSINESS in Italian No 9 Sep 87 pp 116-118

[Article by Clara Covini: "All Research Activities; Telecommunications: The Role of Italian Equipment and Service Companies"]

[Excerpt] Industrial product exporting, which is a basic item of the state budget, implies an international competition involving primarily product and process innovation, which is largely the result of scientific research. This partly accounts for the considerable research activity carried out in telecommunications, a sector of crucial economic importance.

The EEC market for telecommunications (appliances and services), which amounted to 65 billion ECU in 1985 (approximately 100 trillion lire), is expected to grow by 7 percent a year until 1990. This prospective development is fostered by some community programs in Europe: ESPRIT, the first stage of which has just come to an end and which has launched 220 projects in different areas of microelectronics, and the EUREKA and SPRINT programs, which were started in 1985 and 1987, respectively, and aim at the development of new technologies.

Italy's major telecommunications companies, which include SIP [Italian Telephone Company], Italtel, Telettra, Sirti, and Selenia, are deeply involved in the programs mentioned above.

SIP is primarily cooperating with France, the FRG, and Britain for the coordinated and rapid introduction of ISDN (Integrated Services Digital Network). Also, within the framework of the RACE program which is aiming at the gradual implementation of optical fiber networks and related services, the company has launched the "cabled Lombardy" project (see box).

In 1986, SIP's investments in research and development totaled some 50 billion lire, 44 billion of which were allocated to CSELT (Canter for Research and Telecommunications Laboratories). SIP's investments are expected to reach 110 billion lire in the 2-year period 1987-88, with peak records of 240 billion over the 3-year period 1989-91. CSELT, whose contribution is essential to SIP's research activities, is the IRI-STET institutional bodv for advanced research in the area of telecommunications and electronics.

CSELT's studies cover a wide range, from switching problems concerning innovation in public network telecommunications stations (with respect to the progressive change toward ISDN), to the study of transmission media (production of low attenuation optical fibers), up to research in the area of networks and systems by evaluating the size, topology, and structural complexity of potential network equipment. Artificial intelligence also finds applications in the telecommunications sector. CSELT has developed an expert system for the maintenance of electronic stations [PABX] of telephone switching and is studying [other] expert systems to offer to telecommunications users, such as comprehension of natural language.

Within the European framework, CSELT coordinates one of the most advanced projects in Europe, the CVT (CAD VLSI for Telecommunications) aimed at designing complex integrated circuits (VLSI stands for Very Large Scale Integration) VLSI technology plays an extremely interesting role in telecommunications because its combined use with optical fibers is expected to make production of digital, integrated, broadband networks finally possible.

Telettra is one of the companies actively engaged in research of this kind; in its Vimercate-based laboratory, this company is developing new technologies designed for integrated circuits. These investigations are part of the ESPRIT 255 project (CA Methods for Analog GaAs Monolithic IC's), in which Telettra operates as prime contractor and cooperates with Siemens, Cise, MCADT and the Turin Polytechnic Institute. This program aims at software production of circuits made of gallium arsenide (GaAs), an innovative material which, although it is more difficult to handle than silicon, boasts better performance than the latter material, which traditionally has been used for this purpose.

At present, Telettra also is involved in ESPRIT Project 986, which aims at developing high-speed optical interconnections between complex integrated circuits. The company, which is primarily a producer of transmission equipment and radio links, invests approximately 12 percent of its sales volume each year in research and development activities focusing not only on Community projects but also on national programs in cooperation with the CNR (National Research Council). The latter is particularly involved in the area of telecommunications, where it closely cooperates with industrial and university facilities.

In this way, the long-standing gap between pure and applied research--which meant that contacts between the CNR and both universities and industry were scarce and difficult to achieve--is reduced.

The CNR projects cover a multitude of subjects, ranging from the study of transmission equipment (in collaboration with CSELT) to the design of regenerative satellites--that is, satellites on which it is possible to process information on board--carried out in collaboration with Selenia Spazio and Telettra. Also worth mentioning are several projects concerning the study of international communications protocols, conducted within the framework of the ISO (International Standards Organization). The communications protocols play an essential role in that they make it possible to exploit the resources offered by one network and to link up different networks.

In many areas, uncertainty over the standards that will be chosen means that, for immediate applications, there is a tendency to install networks that, although consolidated, can adapt to the evolution of technology and the effective demand for services. In particular, studies have been conducted on the possibility of interfacing a group of heterogenous European host computers to create the EHN (European Host Network); this project also envisages the development of a protocol that, would allow access to only one of the host computers while still having available all the databanks offered by the others (the project is directed at the scientific departments of the CNR and universities).

[Box insert, p 118]

Lombardy Will Be Cabled

The project "cabled Lombardy" consists of the installation of the first broadband optical network in Italy, which is initially designed for business users only but will later be extended to home users as well. The project arises from the necessity of identifying a network pattern capable of supporting the introduction of advanced services in the short run, which will later be offered at a national scale. Thanks to the possibility of using second-generation technologies with respect to the optical fiber, Italy will succeed in bridging the gap existing between its sector and that of other European countries, which are already equipped with networks of this kind (Plancable in France, BIGFORN/BIGFERN in Germany, and British Telecom networks in Britain). Not only SIP, but also the Lombardy regional authority, the Milan municipality, the Cavi Pirelli company, RAI, and Sirti are involved in this project which is scheduled to be implemented between 1987 and 1993. The "cabled Lombardy" project could pave the way for the development in the 1990s of a single broadband communication network of the IBCN type (Integrated Broadband Communication Network), operating on an optical fiber support.

Services carried out by this first broadband optical network for business users range from 2 Mb/s and 64 Kbit/s digital connection capacity to videoconference and bidirectional videocommunication.

Table 1

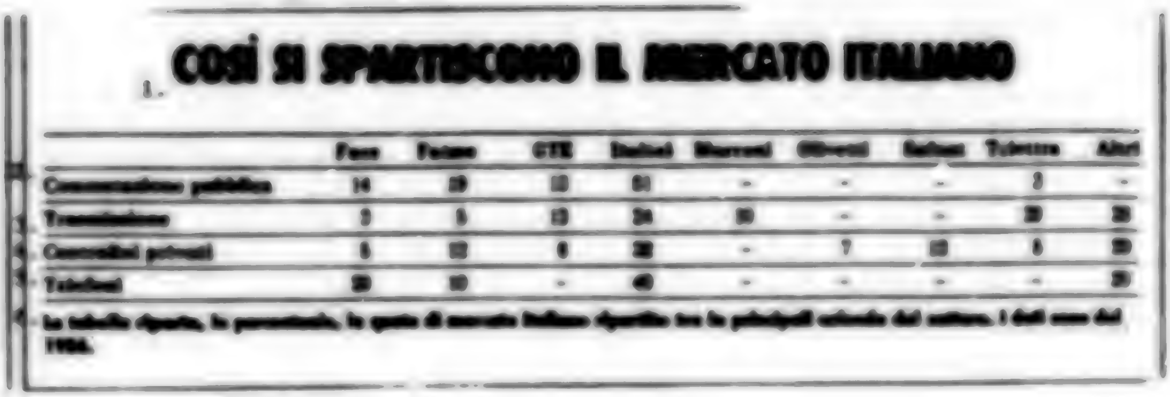

1. COSÌ SI SPARTISCONO IL MERCATO ITALIANO

	Face	Fatme	GTE	Italtel	Marconi	Olivetti	Selenia	Telettra	Altri
Commutazione pubblica	14	19	13	51	–	–	–	3	–
Trasmissione	3	5	13	24	20	–	–	20	20
Centralini privati	5	12	8	32	–	7	10	5	20
Telefoni	20	10	–	40	–	–	–	–	20

La tabella riporta, in percentuale, le quote di mercato italiano ripartite tra le principali aziende del settore. I dati sono del 1986.

Key:
1. Italian market shares
2. Public commutation
3. Transmission
4. Private switchboards
5. Telephones
6. This chart illustrates the percent share of the Italian market acquired by the leading companies of the sector. The data refer to 1986.

8606
CSO: 5500/M430

ADVANCED SYSTEM OF SUPERVISION, CONTROL OF TELECOMMUNICATION NETWORKS (ATS)

Milan SISTEMI DI TELECOMUNICAZIONI in Italian, No 7-8, Jul-Aug 87 pp 30-40

[Article by G. Strada and A. Porzio: "ATS, an advanced and reliable system for the supervision and control of telecommunication networks"]

[Text] This article presents the ATS remote supervision and control system, developed as a result of collaboration in systems design and development among five Italian companies which operate in the sectors of communications and computers. The ATS is being activated on the main Italian radio relay system network.

1. Introduction

The reasons which justify the continuing increase of automated remote control and operations systems, now widely used in every sector of technology, are control of operational and facilities upkeep costs and the necessity of assuring, and possibly improving, the high service standards. The adoption of sophisticated equipment for remote control and diagnosis is even more necessary and justified when the systems controlled become more functionally structured in their architecture and more complicated to manage operatively.

Present day telecommunication facilities notedly offer large traffic capabilities and high degrees of services. But a breakdown, and therefore an interruption of services, for example in a transmission system or at a multiplex terminal, involving a considerable number of circuits, is an event which has to be contained in very brief times so as to prevent situations of congestion and paralysis. One of the methods for reducing the occurrence of breakdowns and their negative consequences is to improve preventive maintenance and make corrective maintenance more efficient by using remote control systems on telecommunication equipment which would perform systematic analysis to monitor possible degradation--to be flagged before thresholds of acceptability are surpassed--and to possibly perform diagnostic checks when breakdowns occur.

In order to minimize the time it takes to reactivate services, such breakdown diagnosis should allow maintenance personnel to adequately plan corrective measures, at the exact location, and with the appropriate tools and exchange parts. In the case of the national radio relay system network, the location of the repeater stations--often difficult to access by maintenance during adverse weather conditions--strongly penalizes equipment use and maintenance.

The ATS remote supervision system, presently being activated on the main Italian radio relay system network and designed for more diversified and extended utilization (energy distribution, highway and railroad traffic control, environmental pollution control, atmospheric phenomena, etc...) is inserted in the communication network as an important element aiming at improving the quality and use of services being offered.

2. General capabilities

The ATS system was designed and built using the latest technology and system approach solutions. It is based on a hierarchical computational structure. The units making up the ATS system, all based on microcomputers and minicomputers, are endowed with autonomous computational and communication capabilities. The system is able to respond, in terms of operational flexibility and functional capability, to the different requirements for the supervision of telecommunication networks.

In this respect, an additional important aspect to underline is the integrability of the ATS system into superstructures whose functions are to more completely manage the network.

The principal functional objectives of ATS are:

a) continuous monitoring of the operational status of the radio apparatus; collection of alarm signals and their interpretation for identifying breakdowns;

b) transmission of commands to the apparatus being controlled to start reactivation procedures or generic reactivation;

c) cyclic measurements of electrical quantities, appropriately selected so as to identify with sufficient lead time situations of progressive deterioration of the level of services;

d) collection of equipment housekeeping data and statistical processing of these data at different levels of aggregation and during different periods of observation;

e) selection and processing of alarm data from the equipment being controlled for the purpose of automatically diagnose, with adequate precision, the cause of the malfunction;

f) presentation of the above listed points to the service personnel in an efficient, timely, and synthesized manner.

3. Architecture of the ATS system

The high degree of flexibility required by the ATS supervision system is obtained through redundant structures. An architecture with two hierarchical levels was chosen, open to integration with eventual higher levels (see Figure 1).

At the lowest level are the Peripheral Apparatus for Teleoperations (APT), which are installed in the Radio Terminals Repeater Stations (SRR and SRT).

At the higher level are the units for Supervision and Control (USC) usually installed in the terminal stations of the radio link (CS).

The USC are connected to the peripheral units by means of data channels in common with all the units of the system, and eventually duplicated. Thus each of the two central units is able to interrogate independently all the peripheral units. Additionally, a direct data channel is used to connect the two USC at both ends of the connection.

Therefore, every SRR-SRT has installed in it a Peripheral Apparatus for Teleoperations which on one side has an interface toward the points of the equipment being controlled, and on the other is connected by modem to the data channel which interconnects all the APT of the radio complex with the computers in the USC terminals. The computer of each USC therefore talks by Polling Selecting procedures with all the APT present on the radio complex and, by means of a dedicated 2400 bps synchronous modem connection, to the corresponding computer at the other end of the radio complex which provides redundancy of calculations (Figure 2). What has been explained so far for a radio complex can be readily extended to the grid structure present in the radio link network and, more generally, to the telecommunication networks: on each USC will converge all the multipoint connections that interconnect the APT installed on the various radio complexes which lead to their respective CS, so as to concentrate their related remote control functions in the radio node; additionally, there will be data connections toward the corresponding USC at the extremities of the various radio complexes. In conclusion, a redundant structure is created which guarantees a high level of operations, and which is also perfectly congruent with the organization in place for the maintenance of radio installations. The stations of a long distance radio relay network are usually under maintenance responsibility of two different centers often coincident, in the present network, with the CS, on the basis of area coverage criteria.

4. Peripheral Apparatus for Teleoperations

The Peripheral Apparatus for Teleoperations is made up of one or more devices interfaced with the field and preprocessing devices (DIP) connected via a local bus to an intelligent and redundant concentration complex (COL) which is able, through a modem--also redundant if necessary--to talk to the two corresponding USC (Figures 3 and 4).

The functions executed are those typical of electrical interfaces toward the apparatus being controlled, and of communication toward the higher processing level. In detail, these functions are:

--sampling of electrical status variations of the on-off type from field points, with filtering, integration, and encoding;

--sampling of analog signals at preprogrammed rates, and analog/digital bipolar conversion to ten bits;

--sending anomalous conditions messages toward the higher level when threshold alarms and prealarms values present in the local data bank have been surpassed;

--retransmission of telecommands to the equipment; these can be of a pulse type or continuous, sent at the discretion of the operator responsible for the USC;

--self diagnosis of any occurrences of hardware and software anomalies, with formulation of specific messages sent to the higher level.

It is possible to employ very high sampling rates to sample the analog signals from the field, enabling the detection and analysis of transitory phenomena; the telecommands are executed by the Peripheral Apparatus for Teleoperations after verification--for reasons of safety--by means of specific software control procedures.

The APT has also a port for a terminal furnished to the maintenance crews to conduct diagnostic procedures and tests in situ, when necessary; also foreseen is the possibility of connecting and guiding intelligent instrumentation by means of a specialized physical and logical interface.

5. The supervision center

This center consists of a minicomputer and related peripheral equipment, furnished with the necessary software to gather and centrally accumulate information on the network under its control, to process this information, correlate events, and present specific events. In detail, the functions performed are the following:

--control of communications toward peripheral units for the acquisition of alarm and measurement data through cyclical interrogation procedures; appropriate calculations are performed on the alarm data to interpret its meaning for every point found with alarm data, comparisons are made between the present state and preceding situations, and anomalies encountered are identified on synoptic displays. Values of collected measurements are converted into predetermined units of measurements, referenced to a variable programmable scale, and after presentation on a graphical video terminal, are archived;

--exchange of information with the corresponding USC to reciprocally verify correct functioning, to update its central data bank at restarts and, in general, to keep the archives updated.

In case of an anomaly encountered by a USC on another corresponding USC, the remote control activities of the malfunctioning USC are automatically taken over by the other USC, except after restore--always automatic--of the initial situation when the inactivated USC returns into service;

--on line and off line management of a data bank containing the descriptions and characterization of the alarms, the various types of remote measurements and commands, and the description of the equipment controlled;

--management of man-machine interface for the various functions covered by the USC software.

The structure of the centralized USC unit is shown in Figure 5. Its software, whose principal functions were briefly mentioned previously, is modular so as to guarantee maximum flexibility, security, and efficiency (Figure 6). It is made up of the following modules:

--operational nucleus in real time for multi-task multi-user applications;

--environment software made up of subprograms for communications to the peripheral APT and the other corresponding USC;

--application software subdivided into the following blocks:

- control of alarms, remote measurements, and remote commands;
- control of interactions with the data bank;
- control of procedures for detecting and analyzing breakdowns and of procedures associated with maintenance interventions;
- control of man-machine interface and visual graphics;
- management software for the data bank;

The data bank contains all the necessary information to describe the controlled system under all foreseen alarm situations, the type of alarms, the remote measurements and remote commands and the modes of presentation, and also the characteristics of the supervisory system itself, i.e., the location of its components and the configuration and make up of the various installed peripheral equipment. The USC data bank is organized in such a way to guarantee a structure independent of the particular configuration of the controlled network.

This permits the characterization of the system in a way consistent with the particular application, without any modification to the programs; also possible are reconfigurations resulting from changes in equipment mix, location, and configuration. Also present in the data bank is the necessary information for identifying the alarms and finding the breakdowns. Later on we will deal in detail with this information.

6. Salient aspects of the man-machine interface software

All the interactions between operator and computer take place by means of color graphics on the video terminal and through the keyboard. Particular care is given to the relevance and compactness of the graphic information presented to the operator; use of the keyboard is simplified through the utilization of function keys so that interaction between operator and system and vice versa allows easy and rapid acquisition of information from the system being controlled and guarantees against the occurrence of errors of interpretation and operational errors.

Figure 7 summarizes the available functions:

--A synoptic diagram (Figure 8) presents, in a continuous mode on color video graphics, the configuration of the controlled connections with the names of the repeater stations and a summary indicator of presence of anomalies, through association of color and state of normal/pre-alarm/alarm, station by station.

The presence of serious and non-serious alarms is shown by means of flashing and color changes of symbol representing the station of interest.

The stations' radio bands are represented by means of different color lines; the occurrence of an outage in a trunk is signaled by specific symbols.

The operator can select the area he wants to observe by simply positioning the cursor on the area of interest, which could be the entire area covered by the control systems and under his jurisdiction, the radio complex only, the radio station, one of the subsystems being monitored (energy, housekeeping, etc...), or a specific band or trunk.

After choosing the area of interest, the operator selects the desired function (active alarms, measurements, statistics, data bank searches, alarm computation and analysis of breakdowns, etc...);

--easy to comprehend presentation of the alarms in the selected area with the seriousness, date and time of occurrence, system, radio complex and station concerned, and any maintenance activities being implemented, pointed out by means of an appropriate 'tag';

--statistics on the breakdowns with presentation of the related histograms, obtained by using multiple selection keys;

--carthesian or linear bar graph presentation of the measurements being taken or previously stored (Figure 9). It is possible to simultaneously present a maximum of four measurements with different vertical scales, referenced to a 24 hour span on the horizontal scale. One can obtain finer details with the zoom function (Figure 10).

7. Alarm correlations for identifying breakdowns

One of the objectives of the AIS monitoring system is to furnish--when alarms arise on the network--a diagnosis of the situation which is as accurate as possible, defining the true origin of the alarms, that is, the apparatus having operational anomalies.

Therefore, it is useful to conduct a sorting out function on the large number of alarms that can occur,in one or more parts of the system being monitored, at the onset of a major breakdown. Consider, for example, the number of alarms that a power outage on a radio apparatus can unleash in the area nearest the breakdown and along the radio link, from the other repeaters.

Thus, the arrival of a cascade of alarms--significant and not--has to be controlled in a way that simplifies analysis and breakdown identification conducted by the operator on each alarm; if the array of alarms received, and properly correlated, could facilitate the search for the most probable cause of the breakdown, the operator's task would be considerably simplified.

The ATS system , therefore, is furnished with a central software which performs the following two functions:

--the selection and eventual block of 'secondary' alarms to prevent arrival to the operator of useless and lengthy lists of unimportant information; employed are algorithms which systematically compare the 'trees' of primary alarms with the series of alarms received from the radio link equipment. The 'trees' of primary alarms are made up of time logical information which defines the generation of sequences of alarms following a primary alarm.

--correlation of the alarms with the purpose of identifying the primary alarm and therefore the cause of the breakdown. This function is performed using appropriate correlation tables derived from breakdown statistics for the network, the radio complex, and the type of equipment present. This tool, developed by means of artificial intelligence techniques, has general validity for defining the various possible correlations, it is flexible, and easy to use by the operator.

The alarm signals arriving at the USC from the equipment, automatically trigger the filtering operations and, in parallel, a process of correlation analysis which is continuously repeated.

If during the calculation process the probability of having detected a breakdown is sufficiently high, then the hypothetical source for the alarms will be presented to the operator; the process of identifying the breakdown will, however, proceed by continuous analysis of the correlations with subsequent alarm signals from the network, and will progress either toward confirmation, in probabilistic terms, of the already identified cause, or the identification of alternate causes for the breakdown.

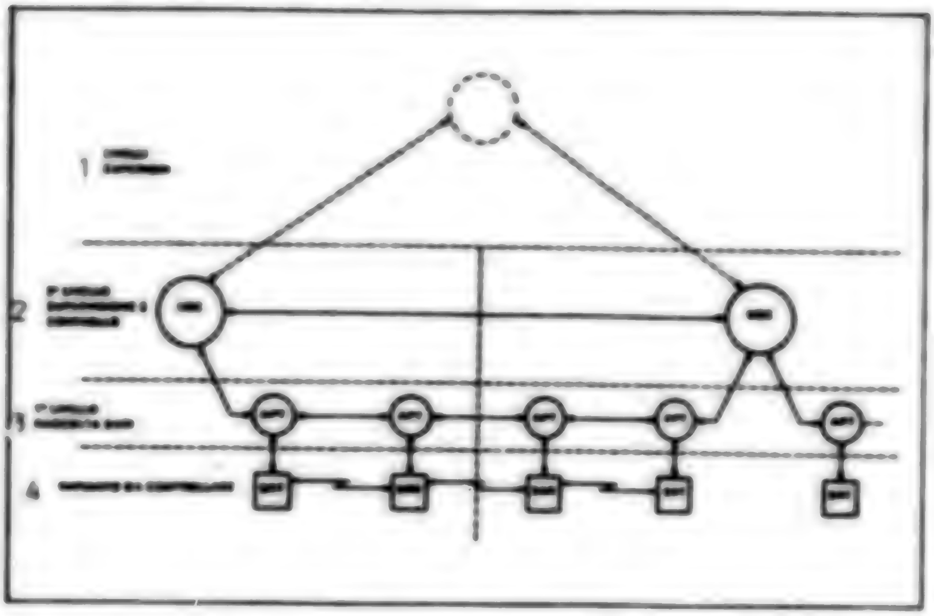

Figure 1. Structure of the ATS system operating on a radio complex
Key: 1. Higher levels
2. Second level of supervision and control
3. First level of data gathering
4. equipment to be controlled

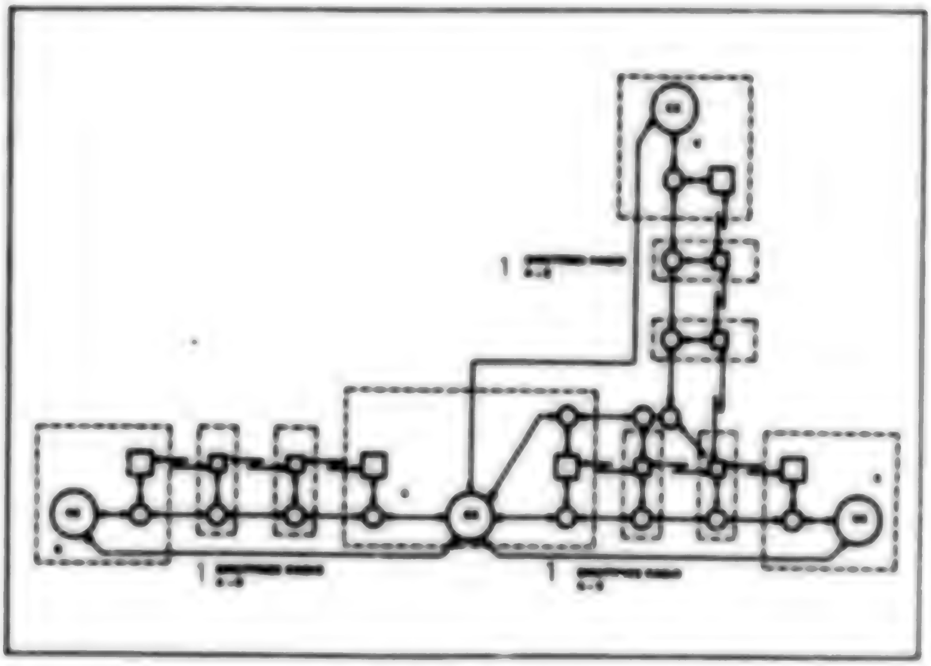

Figure 2. ATS system operating in a radio network
Key: 1. Radio complex

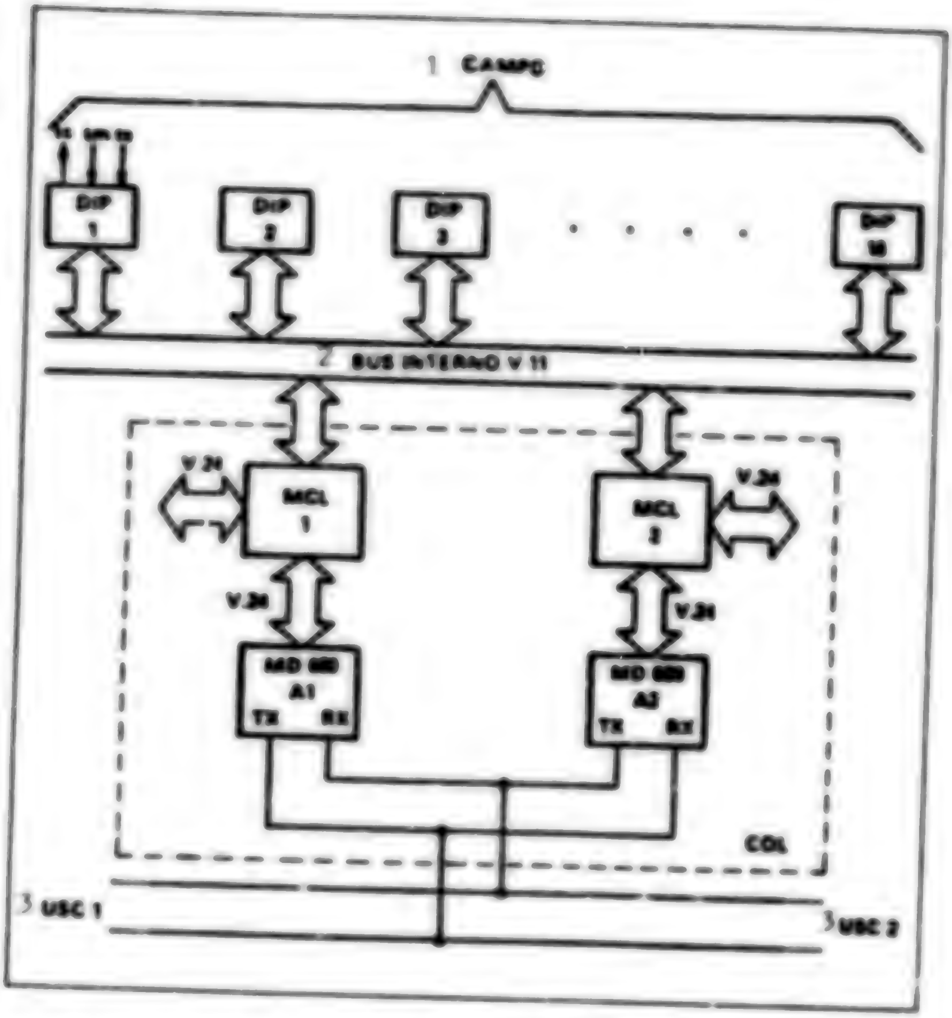
1 CAMPO
DIP 1
DIP 2
DIP 3
DIP
2 BUS INTERNO V 11
V 24
MCL 1
MCL 2
V.24
V.24
V.24
A1
A2
TX
RX
TX
RX
COL
3 USC 1
3 USC 2

Figure 3. Structure of the APT peripheral apparatus for remote operations
Key:
1. Field
2. internal bus
3. Exit

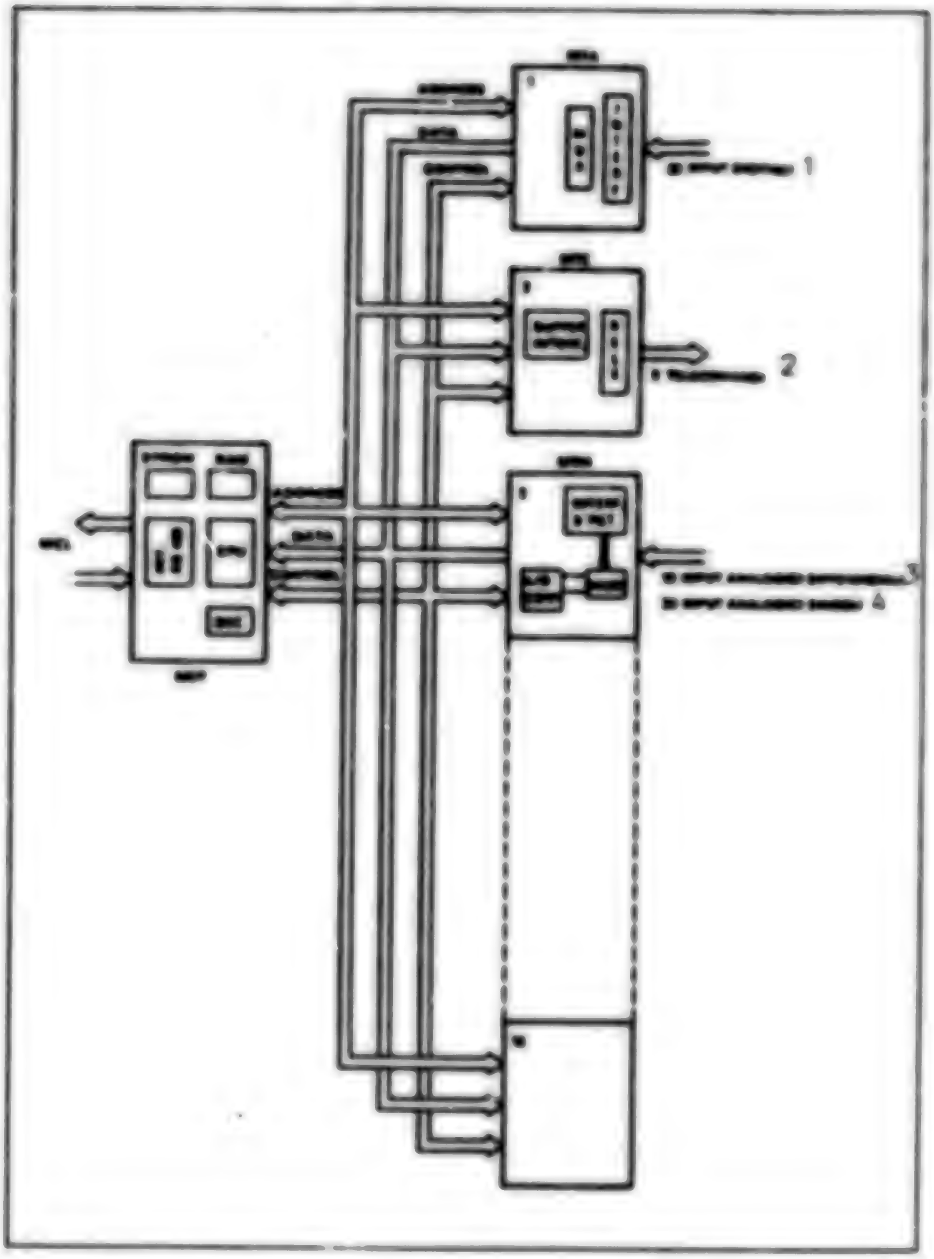

Figure 4. Apparatus for interface with the field and pre-analysis

Key:
1. Digital inputs
2. remote commands
3. differential analogue inputs
4. single analogue inputs

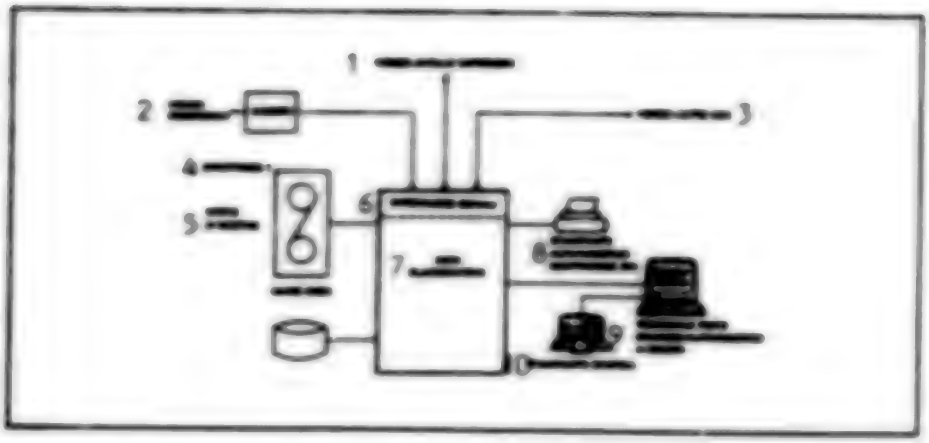

Figure 5. Supervision and control unit
Key:
1. Toward higher level
2. Toward peripheral
3. Toward other USC
4. Radio complex 1
5. Tape unit
6. Serial interfaces
7. Minicomputer
8. Alphanumeric printer
9. Graphic/alphanumeric color monitor
10. Graphic printer

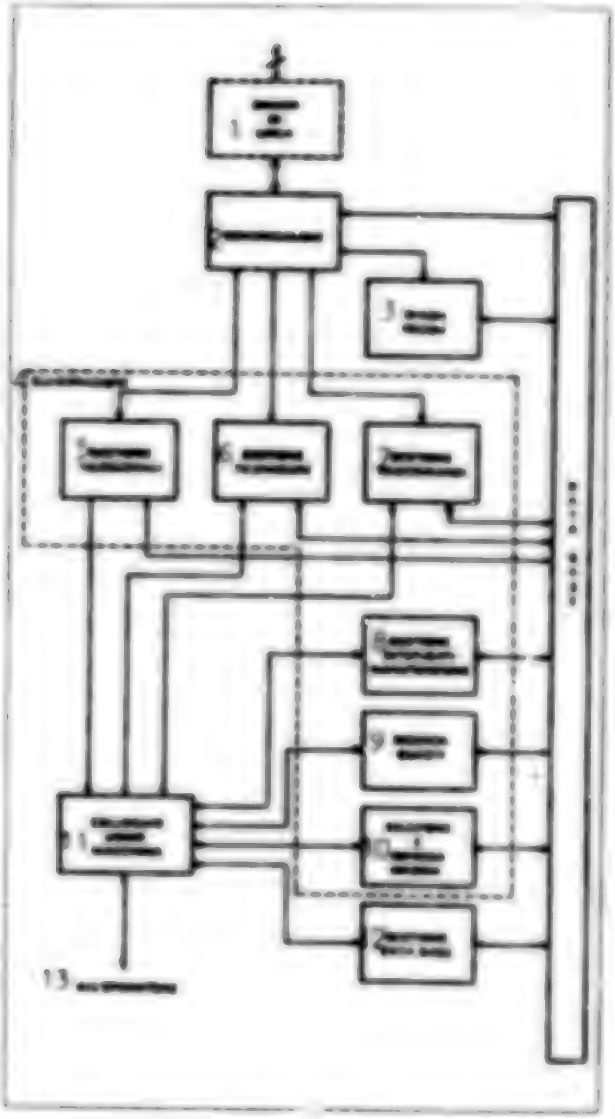

Key:
1. Line driver
2. Communication
3. Diagnosis and recovery
4. Computations
5. Management of remote signals
6. Management of remote measurements
7. Management of remote commands
8. Management of maintenance events
9. Search for breakdowns
10. Selection and gathering of information
11. Man-machine interface
12. Data base management
13. To the operator

Figure 6. Architecture of the USC software

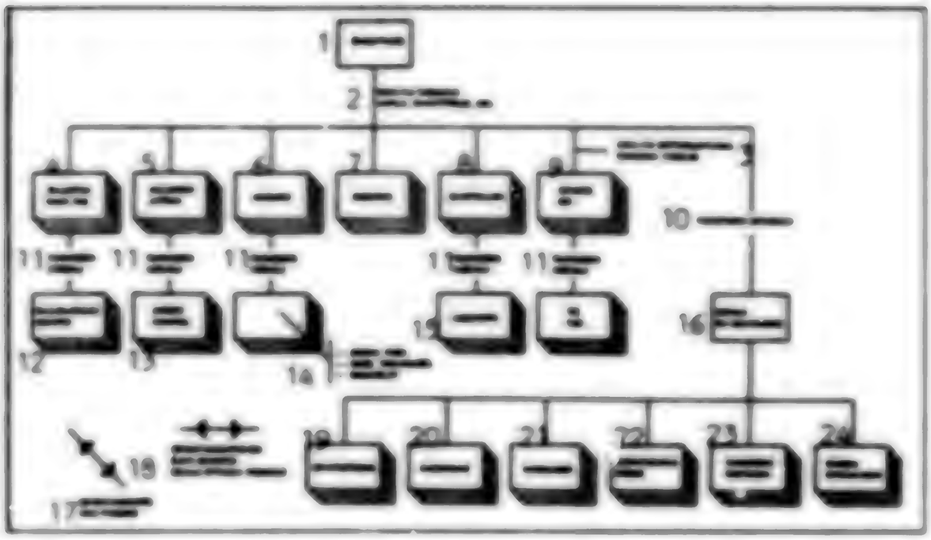

Figure 7. Menu organization of the man-machine interface software

Key:
1. Synoptic
2. Choice of display (area, radio complex, radio station)
3. Choice of subsystem: band, trunk
4. Alarms not recognized
5. Active alarms
6. Measurements
7. Reserves
8. Tags
9. Status of radio station
10. Special functions
11. Local functions
12. Recognition
13. Opening of tag
14. Zoom, pan, display modes
15. Updating
16. Selection menu
17. Page up-down
18. Cursor left-right
19. Statistics
20. Searches
21. Messages
22. Configuration
23. System functions
24. Operator guide

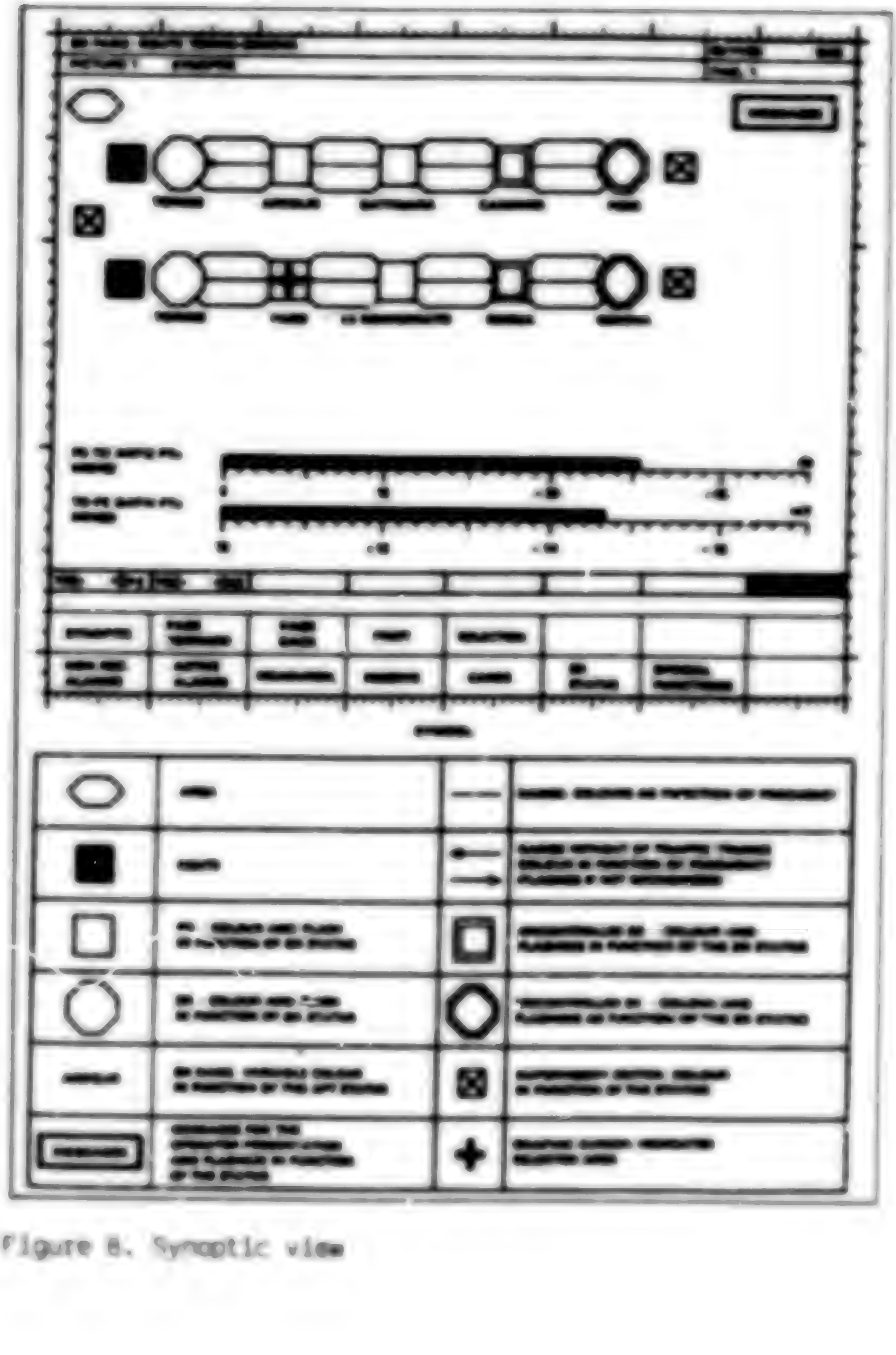

Figure 8. Synoptic view

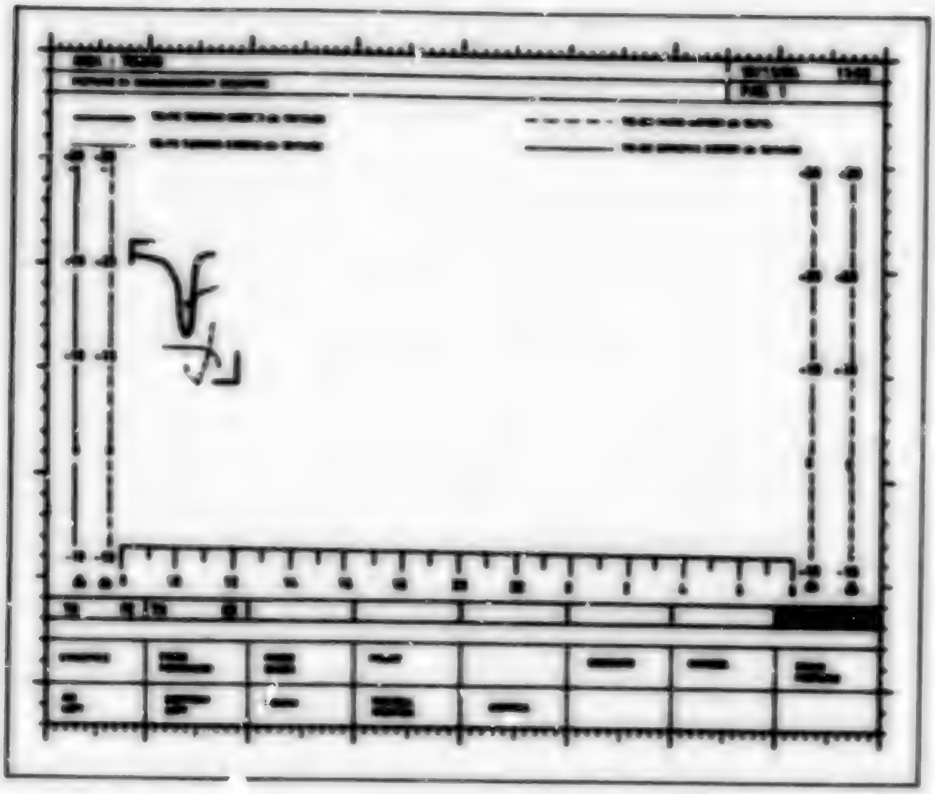

Figure 9. Cartesian presentation of measurements

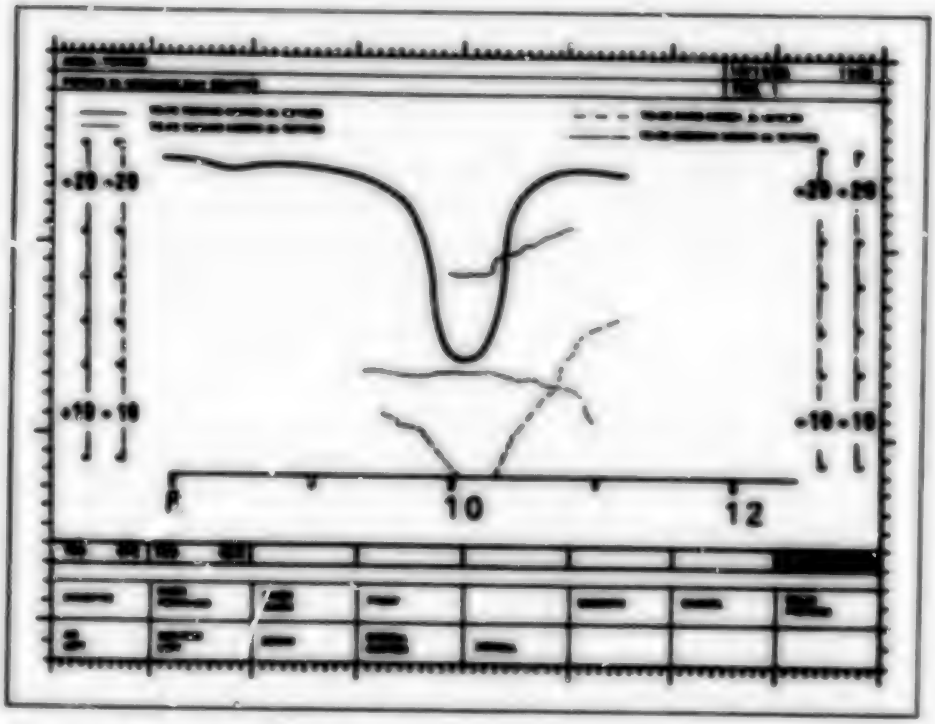

Figure 10. Zoom function

CSO: 8028/2349

EXPERIMENTAL INTEGRATED MULTISERVICE LAN PRESENTED

Turin CSELT TECHNICAL REPORTS in English 1987 pp 359-364

[Article by G. Audisio, F. Ferrero, L. Grossi, P. Marchisio, "An Experimental Integrated Multiservice LAN"]

[Text]

1. Introduction

The need of new communication systems, able to integrate efficiently and cost-effectively a wide range of services, like telephony, computer communication and video services, is envisaged in the enterprises of the future. This particularly involves the local environment where the required workload may reach several hundred Mbit/s. In fact, a large number of applications — office automation scientific computation, hardware and software [illegible], videocommunications, etc. — will find an early port within a local area network. A number of these plications require high-capacity communications and therefore adequate physical transmission media, such as those represented by optical fibres.

A different treatment of stream and bursty traffic has to be used to cope effectively with the integration goal. In fact, packet switching well suits local computer networks where bursty traffic dominates, but it is unsatisfactory for coping with real-time stream traffic. Synchronous circuit switching meets stream-traffic needs, but it is unsuitable to handle variable bit-rate communications. Therefore, a switching concept based on the integration of packet and circuit switching — the so-called hybrid switching — appears able to guarantee the required performance, in terms of both network efficiency and grade of service offered to each type of traffic.

An experimental multiservice LAN (i.e. LION: Local Integrated Optical Network) implementing the hybrid-switched approach is currently under development (patents pending) with the following major characteristics:

1. capability of handling up to several hundred stations and up to a few thousand users;
2. undirectional bus topology with active tapping;
3. protocol architecture consistent with the reference model for Open System Interconnection (OSI);
4. fault tolerance with respect to cable breaks and station failure;
5. prototype node designed by considering economics, reliability and flexibility criteria.

An outline of the paper is as follows. Sect. 2 reviews the main features of LION, focusing on the network architecture, system topology, hybrid-switched technique and communication protocol profiles. In Sect. 3 the system choices, concerning the Network Communication Unit (NCU) architecture, are discussed on the basis of the functional requirements and technological aspects. Finally, some meaningful technical solutions, adopted for the NCU prototype, are described in Sect. 4.

2. The LION Approach

The LION network is intended to cover areas of diameter in the range of few hundred meters up to one

(*) Ing. Gustavo Audisio, Ing. Flavio Ferrero, Dr. Luigi Grossi, P.I. Pietro Marchisio, CSELT, Torino. Paper presented at "MELECOM'87", Roma, March 1987. This work is supported in part by the Commission of the European Communities within the "European strategic programme for research and development in information technologies (ESPRIT)" under Project Number 169 "Local Integrated Optical Network (LION)" dozen kilometres or more and integrate services with different requirements, such as voice, data, high resolution graphics and compressed moving video. The first LION prototype works with a 140 Mbit/s transmission rate, but some five hundred Mbit/s are foreseen for a future test-bed.

2.1 *Network Architecture*

The LION architecture can be divided into three macro-levels, as shown by Fig. 1. The application level, uppermost in the figure, encompasses both distributed user equipment (telephones, data and video terminals, etc.) and centralized ones (PABXs, videoconference rooms, mainframes, etc.). The Access Interface (AI) collects the user equipment and provides two types of network service: 1) a transport service consistent with the reference model for Open Systems Interconnection (OSI) for the packet-switched traffic and 2) a transparent "bearer" service for the circuit-switched traffic.

Below AI, the communication macro-level can be recognized. The NCU is the module responsible for interfacing the user, on one side, and the underlying transmission sybsystem, on the other. It accomplishes all the OSI layer 2 through 4 communication protocol functions. The LION system management is based on the Network Control Centre (NCC), which performs key operations of network initialization and dynamic reconfiguration, and provides administration, diagnosis and accounting functions. Furthermore, other basic network modules are one or more gateways to communicate with public networks, e.g. ISDN or X.25.

At the lowest architectural level there is the transmission subsystem that provides an OSI physical layer service. The key module is the Medium Attachment Unit (MAU), which carries out typical transmission tasks, like signal regeneration, timing extraction, etc., to allow the exchange of user and control information — through the physical medium — among the NCUs connected to the network. Refer to [1] for a detailed description of the MAU. A two-fibre unidirectional bus topology has been adopted [2]. A complete connectivity among all nodes is achieved through the "read" channel, which conveys to all nodes the information transmitted onto the "write" channel. An active MAU tapping strategy is used, i.e. each node regenerates the optical signal. To enhance system reliability, a distributed reconfiguration mechanism is provided: when a failure occurs, the network reconfigures automatically, thus isolating only the failed network elements [3].

2.2 *Hybrid Access Technique*

An integrated circuit and packet approach — the so-called hybrid switching — is pursued at the Medium Access Control (MAC) layer to meet the system requirements and traffic mix, derived by the telecommunication service scenario [4]. In hybrid switching, the activity of the digital channel is organized in periodic frames of constant length (Fig. 2); each frame consists of two regions, the first for circuit-switched traffic and the other for packet-switched communications. The boundary between the two regions is not fixed but moves in order to follow the actual demand for circuit channels.

This technique provides stream traffic with channels characterized by: 1) transparency, 2) low and almost constant delay, 3) variable capacity — without any limitation from a few bit/s to dozens of Mbit/s —, 4) very low switching overhead and 5) frame synchronization. According to the proposed scheme, packet traffic uses the residual capacity. All these characteristics, together, lead to a high efficiency [5].

2.3 *Protocol Profile*

The communication protocol profile is shown in Fig. 3. Bursty traffic is offered a connection oriented network service for both internal and external calls. This is obtained through an X.25 Packet Layer Protocol (PLP), modified according to ISO DP 8881, in which [6]: 1) a packet loss recovery is guaranteed by means of a mechanism already defined in ISO IS 8208 — but actually not used in public networks —, 2) timers' durations are tuned to typical delays expected in a LAN environment and 3) a simplified strategy is defined for the logical number channel assignment. Thus, type-1 Logical Link Control (LLC 1) and Class 0 transport protocol are used as layers 2 and 4, respectively.

A transparent "bearer" service is instead offered to stream-type traffic in order to satisfy its real time and throughput requirements. In this case stream data benefit of a direct access to the MAC. Signalling for stream communication management is derived from CCITT I.450/451 recommendations for ISDN [7]. Adaptations are introduced to overcome the grade of service impairment raised by packet loss and take into account the specific features of a LAN and the network management architecture. In consequence of these adaptations, the use of LLC 1 is allowed.

The LION Administrative Exchange Protocol (LAEP) specifies the remote interface between the network management entities, viz. the NCC and the Management and Control Units (MCUs) that reside in the NCUs. The MCU is responsible for managing the NCU resources according to the NCC directives. A hierarchical relationship, of manager/agent type, is defined between the NCC and MCU to simplify the management procedures. The MCU is normally allowed to execute only explicit NCC commands, except in case of locally manageable malfunctioning.

3. Network Communication Unit (NCU) Architecture

A wideband LAN must warrant multiple access to a number of independent users with the requirement of distributed processing and intelligence. A key element is, therefore, the NCU.

The main characteristics of wideband LAN NCUs, suitable for various application environments, are the following:

1. Functional modularity in order to separate topology and access protocol dependent hardware from high-level communication functions, thus allowing a technology free evolution without additional design effort.
2. Ability to sustain cost-effectively both packet-switched and circuit-switched traffic, thus allowing the system to cover the broadest range of communication needs in terms of bit-rate, delay, transmission quality, etc. and to enhance the degree of compatibility with existing terminals and communication equipment.

These items determine the general configuration depicted in Fig. 4. Bursty traffic is managed by the Bursty Data Module (BDM), which implements the communication protocols and provides the storage facilities for packets. The circuit transfer control is performed by the Circuit Module (CM), which is mainly a hardware module also including the circuit data memories. The Management Module (MM) carries out the management functions by handling the local node resources, gathering statistical information about the node status, providing for the automatic network reconfiguration in case of recognizable failures and managing the administrative protocol towards the NCC. Both circuit and bursty data, separately handled by the CM and the BDM, flow to the Access Control Manager (ACM), which performs the hardware functions of the MAC sublayer. It manages the hybrid access protocol and the interface with the MAU.

The user access interface has been defined aiming to maximize the performance with respect to the required openness and capability to operate with different mixing of terminals and services. In the NCU prototype a physical interface based on an ad-hoc I/O bus, has been adopted (Fig. 5a). It can operate up to 8 Mbit/s and covers the requirement of independence from connected devices and LAN protocols. However, the aim of testing the advanced LION performance consistently with the existing traffic scenario has determined the need to support also a limited set of standard interfaces (e.g. synchronous serial lines, Ethernet, etc.) (Fig. 5b).

A more technical analysis of each NCU function is outlined in the following. The stream-type traffic treatment introduces two basic hardware requirements: the synchronization and the real-time handling of the circuit data path. The former aspect falls under the global network synchronization, which is based on a plesiochronous method. Received data are written with the extracted clock in the MAU elastic buffer and read with the local clock. The frequency differences between the two clocks are compensated during predefined stuffing periods, inserted by the head bus node. The local clock, divided by eight, is then used by the NCU to provide the needed timing signals to the hardware blocks, which manage the stream communications (i.e. CM and ACM). Circuit data are real-time handled using pipelined RAM memories, which are switched every 5 ms by a frame syncronization signal. During each frame one buffer is devoted to receive data and the other to transmit, both functions being managed by concurrent processes.

The bursty data traffic is characterized by the throughput requirement, which can vary from 30 to 300 packet/s according to the user configuration. To pursue this throughput objective a modular structure is envisaged to allow different configurations of a node in dependency of its activity. The BDM Management Unit (BMU) is devoted to control the activity of the Protocol Processing Unit (PPU) that carries out network and transport layer duties. The BMU itself buffers the incoming/outgoing packets and schedules the PPU work transferring to it only the data necessary to its processing, i.e. headers and trailers. The data are transferred to the ACM from the LLC layer through a high speed bus. For this reason dual port memories between the main and secondary buses and a DMA mechanism seem to be the best choice.

The integrated handling of circuit and bursty data is finally performed by the ACM according to the hybrid access protocol rules. A hardware implementation of the ACM functions has been carried out with a modular approach suitable to a future advanced-technology development. In fact, use of Application Specific Integrated Circuits (ASICs) — e.g. gate array — is envisaged in subsequent prototypes.

4. Technical Solutions

The NCU design has been approached with the aim of defining an architecture able to satisfy, the requirements mentioned in the previous section. In this chapter the most relevant design methodologies and specific technical choices are highlighted by particularly focusing on the rationale of LION in solving the service integration problem.

4.1 *Protocol Specification and Validation*

The specification and validation of LION hardware and software modules are used both as a means of documentation and as development phase. This approach needs a methodology that coordinates the two steps in order to ensure the correctness of the specification and a rigorous coherence with the operation of the module.

The specification is carried out through SDL (Specification and Description Language) recommended by the CCITT. The SDL has two kind of representations, program-SDL and graphic-SDL, the former is a Pascal-like language, the latter allows the specification diagrams to be displayed on graphic video units or plotted. A tool developed at CSELT [8] is used to handle the different phases of drawing up, process editing, syntactic control and translation from program-SDL to graphic-SDL and vice versa.

The second step concerns the validation of the specification diagrams, thus allowing, indirectly, the validation of the system examined. The functional blocks of the module are described in detail by means of a set of high-level language procedures activated with input signals. The response of the system is then compared with that expe[illegible] Differences between the two outputs may be due to either specification or design errors: if one of conditions is noted, the needed corrections are made and the validation procedure is restarted until a full convergence is reached.

4.2 *Access Control Module (ACM)*

The hybrid access protocol management is performed by the ACM, which handles the data transfer between the I/O memories and the MAU through the so-called L-interface [9]. Here the data transfers occur in a synchronous mode at the 17 MHz frequency, because there is an 8-bit data parallelism.

The ACM consists of four physical modules, which are implemented on double-height Europe cards and based on Advanced Low-power Schottky (ALS) technology. They are the following (see the lower part of Fig. 6):

1. Access Right Handler, which is in charge of enabling the node transmission in both the circuit and packet regions on the basis of the access protocol signals received from the MAU on the sensing/monitor I/O channel.
2. Frame Generator & Transmission Handler, which performs the data transfer handshake on the 8-bit transmission bus and, if selected, carries out the frame generator function. The latter task implies the ability to generate the main protocol commands, i.e. Start of frame, Start of round, etc. and is enabled only for the so-called head-bus node.
3. Reception Right Handler, which performs the packet address recognition and the circuit channel identification to generate the proper enabling signals towards the Reception Handler.
4. Reception Handler, which performs the data transfer handshake on the 8-bit reception bus and the decoding of the hybrid frame signals, received from MAU.

The upper part of Fig. 6 shows the I/O memories and the Alarm Manager board. The ACM interconnection bus has a 16-bit parallelism to manage more easily memories with access times of about 100 ns. As mentioned in the previous section, circuit data need pipelined RAM memories, which have a memory size of about 5 Kbyte to meet the 8 Mbit/s throughput requirement. Bursty data are stored in FIFOs or dual port memories, which exchange data with the BDM through two DMA channels. Finally, the Alarm Manager gathers all the alarms generated by the ACM boards and I/O memories and delivers them to the MM. In addition, it collects the highest priority MAU alarms that require a fast recovery procedure.

4.3 *Software Development*

The maintainability, reliability and speed requirements have led to two main choices about the programming language and operating system.

The *C* programming language embodies versatility and speed, and makes few assumptions on the processor. The code generated by the compiler for normal *C* written functions is about 20% larger than the one yielded by an assembler and runs with almost the same efficiency. At present there are *C* compilers for almost all the contemporary minicomputer systems and *C* is actually used also to write application software [10].

The RMS68K (Real-time Multitasking System) operating system kernel supports the MM software. This kernel comprises the basic functionalities of an operating system, viz. process control, priority based scheduling, interprocess communications, with particular options that speed up the operations matching good real time performance. A system generation utility of the development system permits the tailoring of the final system by cutting off the unuseful parts and integrating new ones.

The software development environment permits a good degree of parallelism in the system structuring and programming phases. The great facilities offered by the VAX system are used to emulate part of the network and to test the logical structure of the modules neglecting the very speed performance. In this way some of the procedures that involve the whole network can be tested and the related programs can be organized in a convenient structure. After this phase, the most of the procedures can be painlessly downloaded into the Motorola VME/10 microcomputer. Here the programs can be integrated in the final operating system environment using also a multitasking symbolic debugging tool. The code generated at this level is then, for prototype purposes, downloaded in the 68010-based target system where is bootstrapped by a local monitor. The linker is also capable to prepare the system, including the relocatable objects, to fit in Read Only Memories (ROM) for a final version.

4.4 *Node Management*

The node management software, located in the MM, can be roughly subdivided into three main parts namely the drivers, the resource handlers, the operating processes (Fig. 7).

The drivers perform all the necessary operations to permit communications with the other modules of the system. The resource handlers work on the principle of information hiding and provide processes with abstract objects to work on. The operating processes, described in the following, are the intelligent part of the system and work concurrently. The Remote Control Server (RECOSE) is charged of the dialogue with the NCC using the LAEP; its main role is to wait for NCC's requests for information or particular actions to be performed in the NCU and then to answer back giving the status at their completion. The local control server (LOCOSE) is the management interlocutor for all the NCU entities that may request information on the node status or statistics. The Node Monitor (NOMO) handles all the abnormal situations of the node, monitoring the errors and collecting statistics. These processes access the relevant node parameters and are awakened for particular events through the Layer Management Interface (LMI).

The management dialogue between the NCC and the MM of each NCU relies upon the LAEP protocol. The NCC can always write or read parameters of each NCU and, possibly, order some actions to be performed locally. On its side the NCU might reach abnormal situations and the MM has the responsability to signal them to the NCC. This data exchange is carried out by means of the five LAEP primitives: GET and SET for read/write operations, COMPARE AND SET for conditional write, ACTION to require complex services, EVENT to signal particular situations. The lastermost is born by NCU only, while the others are generated as requests by the NCC and responses by the NCU. The requests coming from the NCC are processed by the RECOSE, which will execute them directly or by spawning the proper processes.

The LMI is the internal interface between the MM and the Layer Management Entities (LME). Its role is to provide a uniform way to access the management entities of the node. From an architectural viewpoint, the MM must talk with at least the LME of each OSI layer. In fact the network and transport layers are located in the PPU, the data link layer in the BMU and the ACM, and the physical layer in the MAU. The MM is given a transparent software access through the LMI to different hardware structured modules. The LMI primitives permit the read/write access to the most relevant parameters of the NCU, the ability to order actions and to signal events.

5. Conclusions

The paper has addressed the LION experimental multiservice LAN, which is in an advanced stage of development. The LION system topics were described in the main aspects of network architecture, hybrid access technique and protocol profile. The subsequent part described the system choices adopted in the design of the NCU focusing on their relationship with the requirements. Finally the relevant technical solutions were presented giving some flashes on hardware and software examples. The state of the art in electronic technology permits looking at high capacity multiservice LANs as concrete integration perspective for the current scattered set of communication devices.

REFERENCE

[1] Luvison, A.; Roullet, G. and Toft, F.: *A high capacity multiservice local area network*, paper presented at the 3rd International Conf. on New Systems and Services in Telecommunications, Liege, Belgium, (November 13-14, 1986).

[2] Watson, L.: *The integrated services local network*, in Br. Telecommun. Technol. J., Vol. 2, No. 4, (September 1984), pp. 26-33.

[3] Brosio, A.; Cassinari, F.; Lambarelli, L.; Panarotto, G.; Roffinella, D. and Spini, M.: *A reconfigurable high speed optical system for integrated local communications*, in IEEE J. Selec. Areas Commun., Vol. SAC-3, (November 1985), pp. 825-834.

[4] Lambarelli, L.; Luvison, A.; Roffinella, D. and Spini, M.: *Service integration in wideband local area networks: problems and system solutions*, in Proc. International Workshop on Digital Communications, Tirrenia, (September 1985), pp. 315-327.

[5] Lambarelli, L.; Luvison, A.; Roffinella, D. and Spini, M.: *A high-performance multi-service local communication system*, in Proc. IEEE Global Telecommun. Conf. (GLOBECOM'85), New Orleans, LA, (December 2-5, 1985), pp. 457-461.

[6] Zylberman, I.: *X.25 packet layer protocol over local area networks*, in Proc. IEEE Global Telecommun. Conf. (GLOBECOM'85), New Orleans, LA, (December 1985), pp. 1024-1028.

[7] *ISDN user-network interface layer 3 - General aspects (I.450) and specification (I.451)*, CCITT Red Book, ITU, Geneva, Switzerland, (1985), Vol. VI, fascicle VI.9, pp. 34-193.

[8] Bacinella, P.; Cabitt, A.; Saracco, R. and Reda, G.: *Towards a software engineering environment for telecommunication systems based on CCITT standards*, in Proc. 11th Int. Switching Symp. (ISS'84), Florence, Vol. 3, (May 7-11, 1984) paper 33A3.

[9] Ferrero, F.; Gagliardi, F.; Panarotto, G.; Rottinella, D. and Spinelli, M.: *Architecture and system design of a high-bandwidth multiservice LAN*, in Proc. 4th European Fibre Optic Commun. and Local Area Ntw. Exp. (EFOC/LAN'86), Amsterdam, The Netherlands, (June 23-27, 1986) pp. 88-92.

[10] Ryan, R.R.; Spiller, H.: *The C programming language and a C compiler*, in IBM Systems Journal, Vol. 24, No. 1, (1985), pp. 37-48.

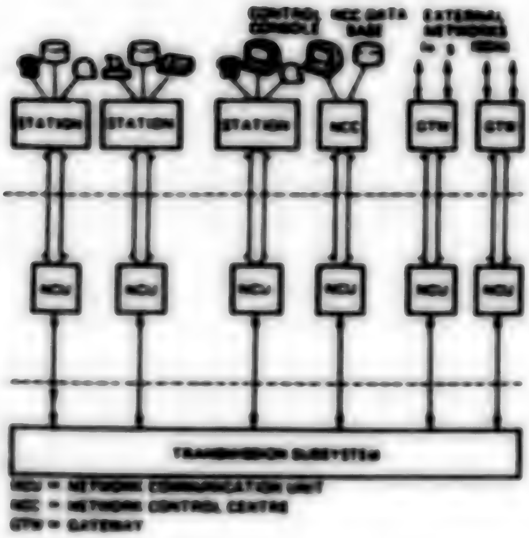
CONTROL CONSOLE
NCC DATA BASE
EXTERNAL NETWORKS
STATION
STATION
STATION
NCC
GTW
GTW
NCU
NCU
NCU
NCU
NCU
NCU
TRANSMISSION SUBSYSTEM
NCU = NETWORK COMMUNICATION UNIT
NCC = NETWORK CONTROL CENTRE
GTW = GATEWAY

Fig. 1 - LION reference architecture.

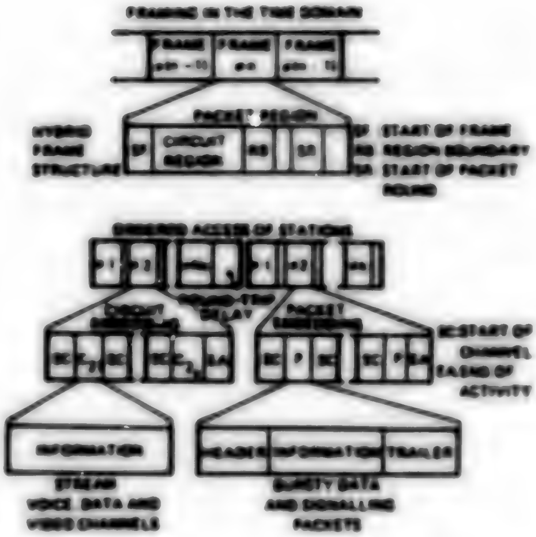
FRAMING IN THE TIME DOMAIN
FRAME
FRAME
FRAME
PACKET REGION
HYBRID FRAME STRUCTURE
SF
CIRCUIT REGION
RB
SR
SF: START OF FRAME
RB: REGION BOUNDARY
SR: START OF PACKET ROUND
ORDERED ACCESS OF STATIONS
ROUND-TRIP DELAY
SC
EA
P
SC: START OF CHANNEL
EA: END OF ACTIVITY
INFORMATION
HEADER
INFORMATION
TRAILER
STREAM VOICE, DATA AND VIDEO CHANNELS
BURSTY DATA AND SIGNALLING PACKETS

Fig. 2 - Structure of the hybrid access protocol. SF: Start of frame; RB: Region boundary; ST: Start of round; SC: Start of channel; EA: End of activity; Cxy: Stream-traffic channels; P: Bursty-traffic packets.

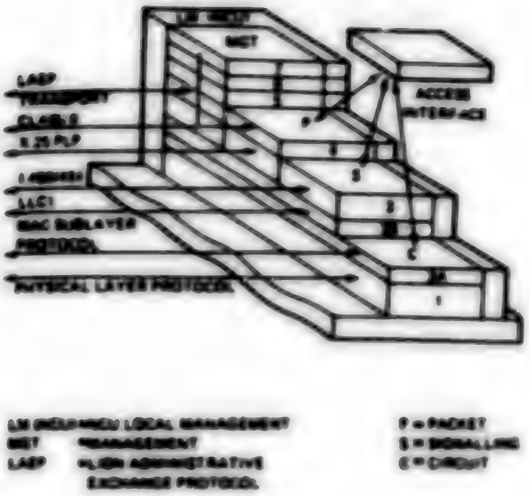
LM (NCU)
MGT
LAEP
TRANSPORT
CLASS 2
X.25 PLP
LLC1
MAC SUBLAYER
PROTOCOL
PHYSICAL LAYER PROTOCOL
ACCESS
INTERFACE
P
S
C
3
2A
1
LM (NCU) NCU LOCAL MANAGEMENT
MGT MANAGEMENT
LAEP ALCON ADMINISTRATIVE
EXCHANGE PROTOCOL
P = PACKET
S = SIGNALLING
C = CIRCUIT

Fig. 3 - NCU protocol profile.

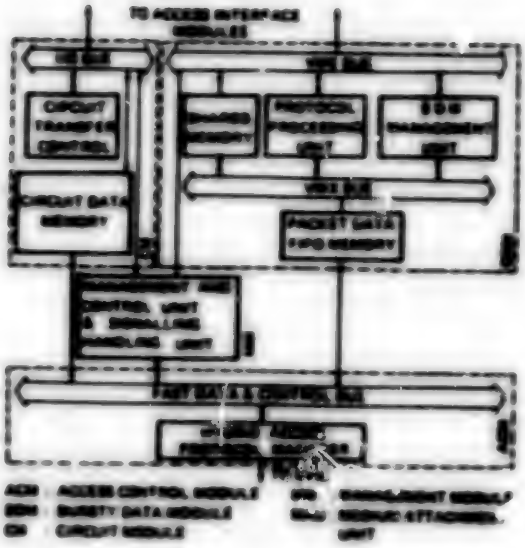
TO ACCESS INTERFACE
MODULES
VME BUS
CIRCUIT
TRANSFER
CONTROL
SHARED
MEMORY
PROTOCOL
PROCESSING
UNIT
BDM
MANAGEMENT
UNIT
CIRCUIT DATA
MEMORY
PACKET DATA
FIFO MEMORY
MANAGEMENT AND
CONTROL UNIT
& SIGNALLING
HANDLING UNIT
FAST DATA & CONTROL BUS
MEDIUM ACCESS
PROTOCOL MANAGER
ACM : ACCESS CONTROL MODULE
BDM : BURSTY DATA MODULE
CM : CIRCUIT MODULE
MM : MANAGEMENT MODULE
MAU : MEDIUM ATTACHMENT
UNIT

Fig. 4 - Network Communication Unit (NCU).

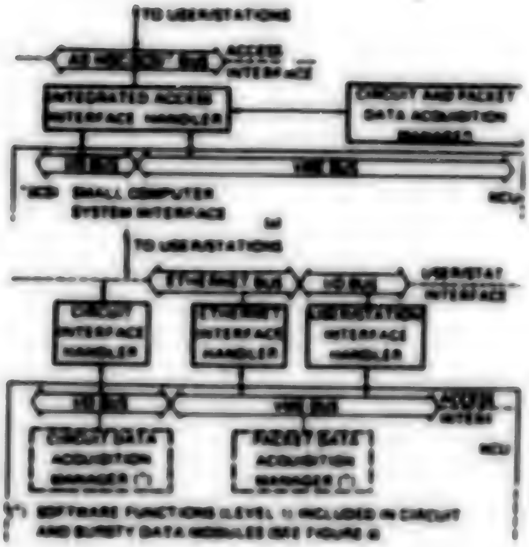
TO USER/STATIONS
ACCESS
INTERFACE
INTEGRATED ACCESS
INTERFACE HANDLER
CIRCUIT AND PACKET
DATA ACQUISITION
MANAGER
VME BUS
SCSI SMALL COMPUTER
SYSTEM INTERFACE
NCU
TO USER/STATIONS
ETHERNET BUS
I/O BUS
USER/STAT.
INTERFACE
CIRCUIT
INTERFACE
HANDLER
ETHERNET
INTERFACE
HANDLER
USER/STATION
INTERFACE
HANDLER
VME BUS
CIRCUIT DATA
ACQUISITION
MANAGER (*)
PACKET DATA
ACQUISITION
MANAGER (*)
NCU
(*) SOFTWARE FUNCTIONS (LEVEL 1) INCLUDED IN CIRCUIT
AND BURSTY DATA MODULES (SEE FIGURE 4)

Fig. 5 - Access interface modules towards NCU:
(a) integrated circuit/packet access interface;
(b) specialized (service oriented) access and user interface.

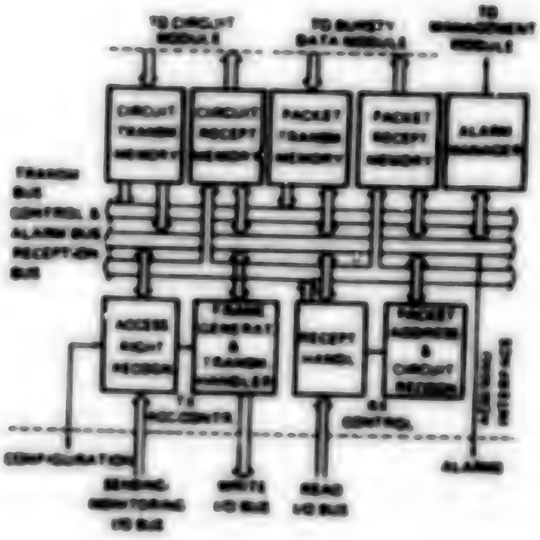
TO CIRCUIT
MODULE
TO BURSTY
DATA MODULE
TO
MANAGEMENT
MODULE
CIRCUIT
TRANSM.
MEMORY
CIRCUIT
RECEPT.
MEMORY
PACKET
TRANSM.
MEMORY
PACKET
RECEPT.
MEMORY
ALARM
MANAGER
TRANSM.
BUS
CONTROL &
ALARM BUS
RECEPTION
BUS
ACCESS
RIGHT
RECOGN.
FRAME
GENERAT.
&
TRANSM.
HANDLER
RECEPT.
HANDL.
PACKET
ADDRESS
&
CIRCUIT
RECOGN.
CONFIGURATION
SENDING
MONITORING
I/O BUS
WRITE
I/O BUS
READ
I/O BUS
CONTROL
ALARM

Fig. 6 - Access control module and I/O memories block diagram.

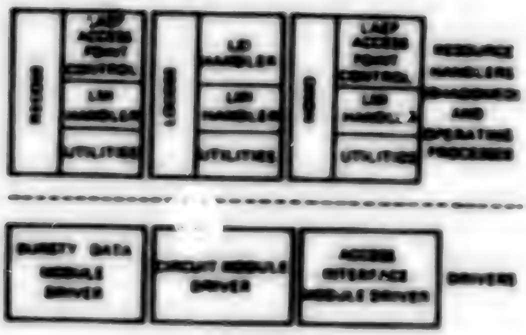
LAEP ACCESS POINT CONTROL
LMI HANDLER
UTILITIES
LSI HANDLER
LMI HANDLER
UTILITIES
LAEP ACCESS POINT CONTROL
LMI HANDLER
UTILITIES
RESOURCE HANDLERS MANAGEMENT AND OPERATING PROCESSES
SURETY DATA MODULE DRIVER
CIRCUIT MODULE DRIVER
ACCESS INTERFACE MODULE DRIVER
DRIVERS

LAEP LIGHT ADMINISTRATIVE EXCHANGE PROTOCOL
LMI LOCAL MANAGEMENT INTERFACE
LSI LOCAL SERVICE INTERFACE

Fig. 7 - Management Module (MM) software architecture.

8800
CSO: 5500/M101

SIP DESCRIBES AVAILABLE DATA TRANSMISSION SERVICES

55002421 Rome PRONTO? in Italian Sep-Nov 87 pp 4-7

[Article by Domenico Vianello]

[Excerpt] Available Networks for Data Transmission

In our country, the following switched public networks are available:

--the general telephone network;

--the circuit-switched RFD (Voice and Data Network);

--the packet-switched ITAPAC network;

--the circuit-switched Telex and Data circuit.

In addition to the switched public networks, CD's [direct circuit(s)] are used--and to a significant extent--for data transmission. These are of two types:

--CDA [analog direct circuit];

--CDN [digital direct circuit].

The two types differ from each other in terms of the transmission technique used, as we shall see shortly.

General Telephone Network

This is the simplest of the data transmission facilities: A standard telephone line, equipped with a modem to convert the data signal present at the terminal from the digital form to the analog form, is all that is needed to link up with one's correspondents elsewhere in the world.

The transmission services provided by a facility of this type depend on the type of modem used (classified according to type-designation defined in international proceedings by the CCITT [International Telegraph and Telephone Consultative Committee]).

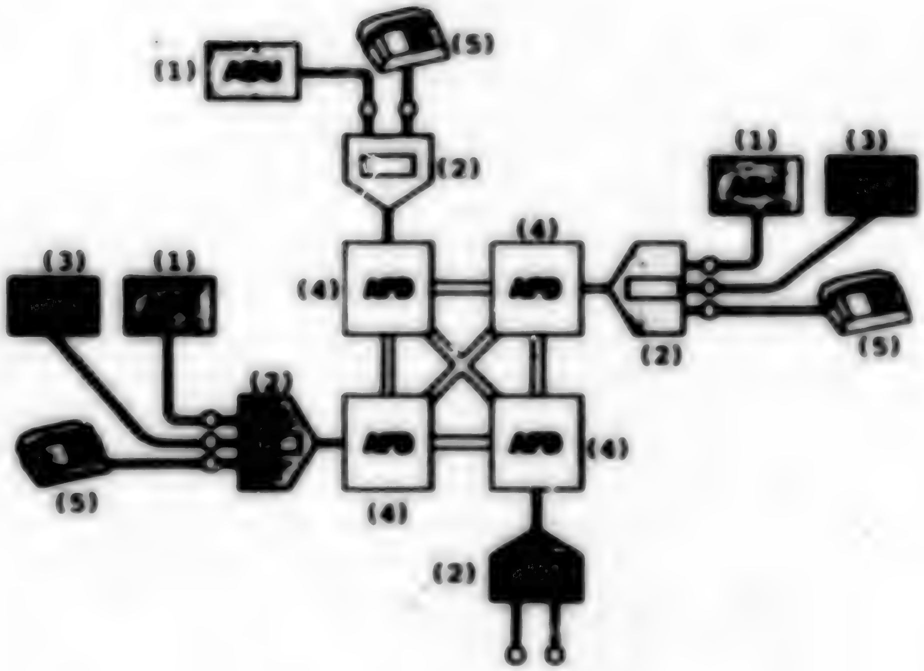
(1)
(5)
(2)
(1)
(3)
(4)
(3)
(1)
(4)
APD
APD
(2)
(5)
(2)
APD
APD
(4)
(5)
(4)
(2)

Fig 2 - Configuration of the RPD.

Key:

1. Subscriber instrument.
2. Concentrator.
3. PABX.
4. Voice/data automatic switcher.
5. Telephone set.

In addition to their basic modulation-demodulation function, modems also enable the use of important auxiliary functions: Automatic answering of incoming calls (performed by the terminal, of course), automatic calling, transmission error detection for terminals that do not provide this feature, and so on. A recent development in products of this type is the availability of multi-standard modems that adapt automatically to the operating conditions required for communicating with different correspondents from time to time. This, of course, makes for extensive operational flexibility: A data transmission user equipped, for example, with a personal computer and a modem of the foregoing type has access to a very broad range of applications, including:

--access to data banks requiring use of a 300-bps bit-rate;

--switched access to the ITAPAC network at 1200 bps on full duplex;

--access to Videotel service with V23 operating conditions;

--file transfers at 2400 bps, etc.

As is clear from these initial summary indications, which will be taken up in more detail in our discussion of applicatory problems, use of the general telephone network for data transmission is not a "poor" way to transmit data, but rather an uncomplicated way which in many cases proves economical, and which is certain to undergo rapid growth in the immediate future. As regards cost, the situation is very simple: To the cost of the urban line and direct dialing service, is added the tariff relative to the subscriber-chosen modem (a further tariffed item, which is common to /all/ [in italics] types of lines used for data transmission, and which is within the province of the Ministry of Posts and Telecommunications, is the governmental concession fee of 120,000 lire annually for each line terminated at each subscriber premises).

Voice and Data Network (RFD)

This network, built during the second half of the 1970's but unfortunately not put in service until April 1983, was designed to provide a high-quality service to those users for whom the use of direct circuits is not justifiable but for whom use of the standard telephone network introduces operational constraints (for example, too-lengthy call-completion times, transmission speeds limited to 2400 bps, etc). In addition to high-quality transmission, deriving from the use of digital electronic automatic switchers and of special-quality junction circuits throughout between the various network components (in accordance with CCITT Recommendation M 1020), the RFD provides a broad range of advanced services, previously described in PRONTO? No. 13 of June 1985.

Forgoing in the present article an examination of the voice services provided by the RFD--very advanced, as they are--let us dwell briefly on the data transmission services it provides. The subscriber with a 4-wire connection

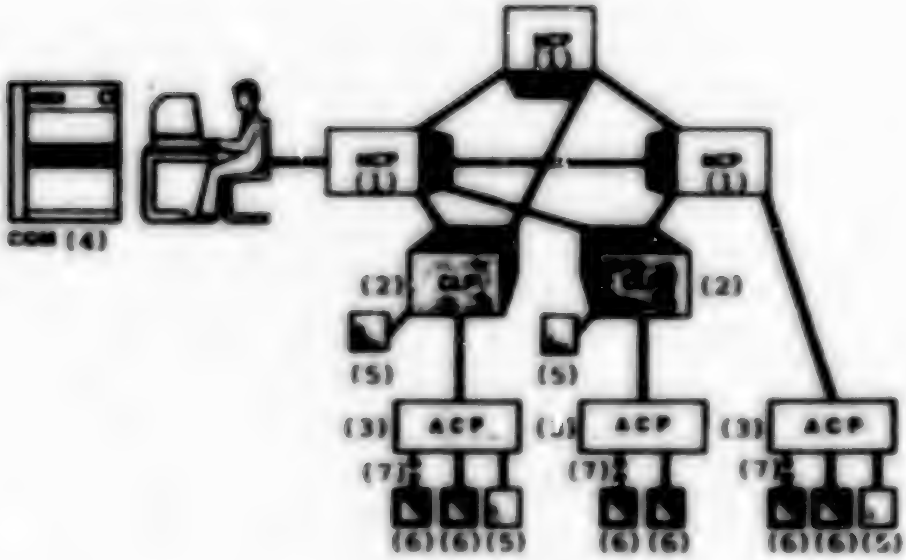
(1)
(1)
(1)
CGM (4)
(2)
CLP
(2)
(5)
(5)
(3)
ACP
(3)
ACP
(3)
ACP
(7)
(7)
(7)
(6)
(6)
(5)
(6)
(6)
(6)
(6)
(5)

Fig 3 - ITAPAC network.

Key:

1. Packet-switching node.
2. Packet-switching node with concentrator function.
3. Packet adapter-concentrator.
4. Network management and maintenance center.
5. X25 Data terminal equipment.
6. X28 Data terminal equipment.
7. Access to ITAPAC via telephone network.

to the exchange for full-duplex operation at all speeds is provided with an ADU (subscriber instrument) which functions as an RFD termination and which enables "dialogue" with the network to obtain the required services. Available transmission speeds are the higher ones obtainable via modem on an analog telephone circuit (up to 14,400 bps), while call-completion times are greatly reduced (on the order of 1 second). And since, as has been mentioned, the network is circuit-switched, it is transparent with respect to the data transmitted.

An important development in RFD-provided data-transmission services has been the so-called "digital connectivity" service, which provides switched connections at 64K bps.

The "closed user-group" service can be of particular interest to the data transmission subscriber. RFD subscriber lines for which this service is requested can communicate only among themselves, thus constituting a "closed" network, for use only by companies requiring this service, still within a switched public network environment. A company, therefore, need not create a dedicated network of its own for purposes of management and privacy of its in-house traffic. These requirements can be fulfilled equally well by the public network.

ITAPAC Network

This important network structure, activated in 1985, has made available in our country as well particularly advanced data transmission services which, in many applications, actually turn out to be those economically best suited to the requirements involved.

This derives from the adoption of the packet-switching technique, by means of which the network's transmission facilities are made available to the individual users only when they actually have traffic to send. To operate in this fashion, the data to be transmitted must be "packetized" before being inputted to the network, in accordance with rules that have been well defined internationally by the CCITT. It is this high level of standardization, together with the inherent value of the packet-switching technology for the handling of data, that have decreed the success of these networks. Networks exist today in all the principal countries for the handling of packet data. These networks are to a very large extent already interconnected among themselves. Virtually all terminals in existence today can be connected to a packet-switching network, whether they be terminals specifically designed for this type of function (called X25 terminals, after the like-numbered CCITT Recommendation), or terminals of the rather common, so-called "start-stop" type called X28 terminals), or terminals that use synchronous protocols (such as, for example, the IBM BSC 1/3 and SDLC) using--in the case of the latter--specially designed X25 protocol adapter sets. Access to ITAPAC is via direct connection for X25 terminals, while for X28 terminals it can be either direct or switched (further details concerning the ITAPAC network are given in PRONTO? issue no. 14, of September 1985).

Telex and Data Network

This network was built by the Ministry of PT. The introduction of electronic exchanges into the national telex network has enabled it to also provide the most advanced data transmission services. A network structure has thus been realized that, besides telex, can also handle circuit-switched traffic within a speed range of 9600 bps. Plans call for interconnecting this network with the RFD so as to combine their respective capabilities.

Direct Circuits

In addition to the above-cited switched public networks, widespread use is being made of direct crcuits for data transmission; that is, circuits leased on a full-time basis to individual users. Virtually 75 percent of present data transmission facilities are of this type, although this percentage is expected to drop with growth of the new switched public networks.

Direct circuits provide the maximum in terms of transmission services (up to 14,400 bps on analog circuits; up to 48,000 bps on digital circuits), and full-time availability of the circuit. These are the reasons why, where high volumes of traffic must be transmitted and/or very reduced call-completion times are essential, the use of direct circuits has been, to date, the user-preferred means.

Of recent date (March 1987) is the introduction in Italy of the providing of this service in digital form via CDN's [Direct Digital Circuit(s)] (see PRONTO? no. 19, December 1986). Actually, digital techniques were already being widely used for transmission facilities throughout our national TLC. CDN's now take advantage of this fact to transmit the data signal--which is inherently digital--without converting it to analog form via a modem (which is no longer needed), but rather keeping it in digital form throughout its passage through the network. Quality is thus improved at a reduced cost (not only is a modem no longer needed, but the available transmitting resources--which are digital--are thus used to better advantage). Without going into the technical details, it can nevertheless be stated that digital operation is the solution of the future, and that even the existing analog circits will gradually be converted over to digital form.

When associated with special equipment, dedicated communications channels lend themselves to realization of the most varied, as well as the most complex, network structures. For example, when special requirements demand it (and obviously, where public-network facilities do not provide the special features required by the user), dedicated networks using packet-switching techniques can be designed for a subscriber's exclusive use. Systems to meet such requirements often call for considerable engineering expertise, in which cases the specific know-how of the TLC public operator plays an important role.

The experience that SIP has acquired and makes available to the user each and every time it is called upon to study a data transmission system can be highly beneficial.

Applicatory Problems: Some Solutions

Based on the foregoing examination of the features offered by the various networks, cursory though it be, some indications have perhaps already emerged as to the best way to use these networks. Let us try to be more explicit in this respect.

The basic structure for the development of telematics as a service with mass appeal must be the general telephone network. It is already present at the points where it can be used for new applications. The required data transmission setup is as simple to install as it is to use. And for low-volume data traffic, its cost is modest.

What uses can be made of this network, then, in the sphere of applied data transmission?

The initial replies are:

--Access to data banks. Normally, in transmissions of this type, high bit rates are not called for, and call-duration times are low. Among the numerous accessible national data banks, those connected with Videotel merit special mention. Considering, moreover, that the telephone network can be used to access ITAPAC, and hence the foreign packet-switching networks, the number of data banks that can be accessed worldwide is simply vast. This is of fundamental importance because possession of information is of strategic import in all activities;

--Financial transactions. The use of "electronic money" is gradually becoming a daily reality. Very reasonably-priced terminals for these transactions can be installed at POS [point-of-sale] locations, as well as in our own homes (home banking), thus developing a huge market;

--Message handling. Use of the switched network, which is normally integrated with the ITAPAC network to also provide value-added services, can be found to be the best solution for the exchange of written communications. More generally speaking, the switched telephone network is a valid and economical means in all cases where the volumes of data to be exchanged are low and do not require very long call-duration times (totaling, for example, less than 1 hour daily); and where the required answering times (including call-completion times) need not be very short (on the order, say, of 1/10th of a second). Integrating the use of the switched telephone network with that of the ITAPAC network, as touched on briefly below, should be borne in mind. The argument for use of the RFD is also a rather simple one: Owing to the high data-transmission bit rates it offers, large volumes of data can be sent economically and in a "transparent" manner. In file transfer applications,

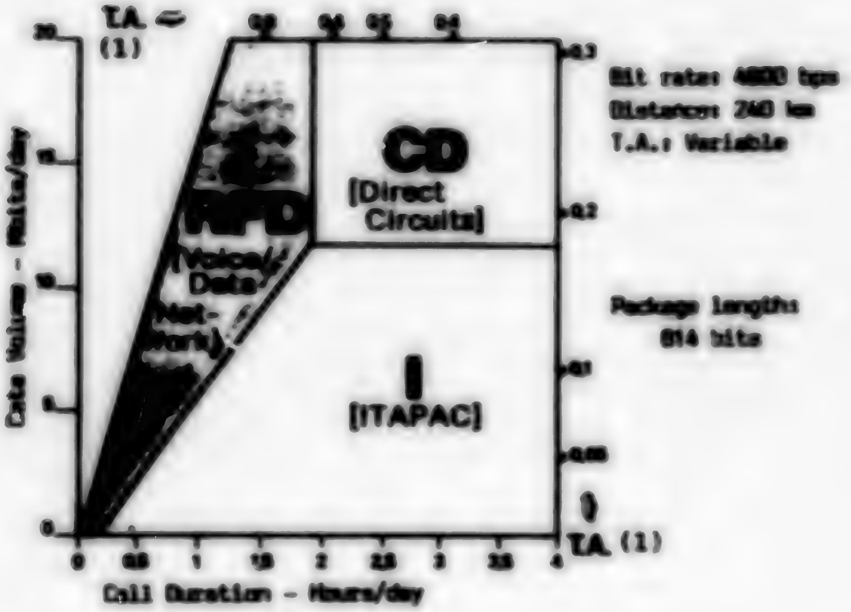

Fig 4 - Parametrically-defined areas of economical use of networks.

Key:

1. T.A. = Rate of activity.

these characteristics are highly advantageous; but this is true also for numerous other applicatory situations: remote job entry, data collection, etc. In the RFD, moreover, call-completion times are very reduced and are not an applicatory constraint, as they may be for the switched telephone network; thus the aforementioned optional features can be used to good advantage.

The use of ITAPAC may at first appear complex, and actually, for connections of the X25 type, it does require knowledge of a few new specific concepts. Once this difficulty has been overcome, it becomes easy to use to advantage the potentialities of this network which, with tariffed rates based on volume and independent of distance, has a very definite field of econnomical application of its own. This is indicated in Fig 4, which defines such fields of application for the various available networks. As can be seen, the use of ITAPAC is of particular interest for moderate traffic volumes.

It should be borne in mind that, once connected to ITAPAC (even by way of the switched telephone network's simple data transmission facilities, as has been mentioned) the service centers connected to the ITAPAC network can be accessed to obtain value-added services. Moreover, the ITAPAC user need not be concerned with compatibility between his terminal and those of his correspondents, in that, the network itself provides the necessary interfacing of speeds and protocols (obviously, within those managed by the network). And lastly, direct circuits are called for when the volumes of data to be transmitted are very high and when special features are required, such as the management of very special protocols not supported by the public network. As regards the traffic parameter, some of the quantitative indications are given, in general terms though it be, in the aforementioned Fig 4 (which of course is valid only under the conditions stated in the chart itself).

It should be borne in mind, however, that, particularly in the case of complex data transmission systems, the traffic parameter is only one among those that must be considered in defining the optimal data transmission network. In these cases, recourse to a validated systems design engineer, made available by SIP, is definitely necessary.

9399

ERICSSON, GOVERNMENT AGENCY TO MARKET MOBITEX MOBILE RADIO

55002424 Stockholm DAGENS NYHETER in Swedish 23 Oct 87 p 16

[Article by Lars Ramklint: "Swedish Mobile Radio To Be Exported"]

[Text] Geneva--Ericsson and the Telecommunications Authority will jointly develop and market the Mobitex mobile radio system internationally. The system has been in operation in Sweden for one year.

It is believed the world market for such a system, which uses radio to communicate with sophisticated data terminals in vehicles, will be a major one by the 1990's.

It is anticipated that by then there will be about 50,000 subscribers to the Mobitex system in Sweden. Translated into the world market, this could mean a demand for 10 million data terminals, according to Ake Persson of Ericsson Radio.

Increased Interest

However, the cooperation between Ericsson and the Telecommunications Authority is not directed at terminals but rather at base stations and the equipment which allows efficient use of radio frequencies to transmit data. Different suppliers will be able to compete for the sale of terminals. Ericsson Radio will be one of these.

Mobile radio systems can be built up by telecommunications agencies, as in Sweden, or by independent operators, as in Great Britain, where about 20 have already been licensed to set up such systems.

"Many believed mobile radio would be a market which would disappear when the mobile telephone was such a big success, but it has remained just the same," said Ake Persson. It appears the mobile telephone has increased interest in radio.

Typical users are trucking companies, which can send all documents to their trucks via radio, and police and fire departments as well. In Sweden, the data systems of taxis will be linked with Mobitex next year.

Cordless

"It is symbolic that all our new products involve cordless communication," Bjorn Svedberg, Ericsson's managing director observed.

He stated his opinion that cordless communication is the fastest growing sector, while Ericsson Telefoni is today more of a mature market.

"In eight years, I think all journalists will be working on cordless terminals," Svedberg predicted.

12789

BRIEFS

TELEPHONE NETWORK--Izmit (DUNYA)--The new electronic telephone exchange with a 25,000 line capacity which recently came on line in Izmit was inaugurated. Attending the ceremony were PTT Istanbul Deputy Director Necmettin Ozelci, Governor Ihsan Dede, Mayor Necati Gencoglu and other officials. During the ceremony to inaugurate the 6.5 billion-lira exchange, Istanbul Deputy Director Ozelci said, "There are 13,730 people waiting for telephones in the city of Izmit. The laying of underground cables is in progress. To keep communications parallel to development in the city, six-digit telephone numbers will be operational by the end of the year. Moreover, all 264 villages in Izmit Province now have telephones, only 16 of which operate on a manual system. Tutunciftlik will be next to get the six-digit system as soon as installation is completed in Izmit." [Text] [Istanbul DUNYA in Turkish 22 Oct 87 p 11] 8349

55002429 END

END OF

FICHE

DATE FILMED

29 Feb. 1988